BIOMASS PRICE LIST AND DELIVERY PROGRAM

04-2021 V1.2

YOUR RELIABLE PARTNER
Herz since 1896
Present on the market for over 120 years

PART 1

HERZ Energietechnik GmbH

PART 1:

Wood gasification boiler ..... 18-40 kW
Combination boiler ..... 20-40 kW
Pelletboiler ..... 10-60 kW
Pelletboiler with condensing technology .... 10-101 kW
Woodchip-/pelletboiler ..... 20-201 kW
Woodchip boiler with condensing technology ... 30-40 kW
Room-discharge systems
Buffer/hot water tanks/hot water preparation

PART 2:

Woodchip-/pellet boiler ..... 20-1.500 kW
Room-discharge systems
Woodchip filling systems
Flue gas condensation
Buffer/hot water tanks/hot water preparation

GENERAL NOTES

Basic information:
The terms and conditions of business and delivery of HERZ Energietechnik GmbH in the latest valid version, as well as the agreements confirmed with the acceptance of the order, shall apply to all business transactions.

Alterations:
We reserve the right to make alternations of any kind and in the event of errors. Most of pictures are illustrations.

Validity of the price list:
This price list is valid from April 2021.
With this pricelist all previous price lists and sales documents for this product range lose their validity. Remaining stocks will be reduced.

Prices:
Unless otherwise indicated, all prices are list prices excluding VAT.

We reserve the right of errors, misprint, typographical failures and technical modifications! Data about our products are not guaranteed characteristics. Mentioned and illustrated discharge systems are system-dependent and only available as an option. In case of discrepancies between documents with regard to the scope of supply the information in the current offer is valid. All images are representations as a symbol and serve only to illustrate our products. Current information and data can be found in the members area at www.herz-energie.at/membersbereich.

Overview of the DISCOUNT GROUPS:

firestar 18-40 model range Lambda ECO	A3
firestar 18-40 model range Lambda & De Luxe	A
pelletfire 20-40	K
pelletstar 10-60 model range ECO	B3
pelletstar 10-60	B
pelletstar CONDENSATION 10-60	B2
pelletstar CONDENSATION 80-101 firematic CONDENSATION 30-40	C4
firematic 20-101	C1
firematic 120-201	C2
firematic PELLET 120-201	C3
Bag silo	E
Bag silo of the ECO-Line	E3
Discharge systems, storage room filling systems	L
Accessories	G, Z
Hot water tanks, buffer tanks, fresh water modules	H
Spare parts	M

BIOMASS BOILERS AND ACCESSORIES

Wood gasification boiler, pelletburner & combination boiler (wood gasification - pelletboiler)

firestar 4-7
pelletfire incl. accessories 8-10
Accessories flue pipe 10
Accessories T-Control & external controller 11-13

1

Pelletboiler

pelletstar 14-15
Accessories flue pipe 16
Hand filling and suction hoppers incl. accessories for pellets 17

pelletstar CONDENSATION 18-21
Chimney connection pipe 22-23

Accessories T-Control & external controller 24-27

2

Woodchip-/pelletboilers

firematic CONDENSATION 28-29
Chimney connection pipe 30-31

firematic 32-33
firematic PELLET 34-35
Accessories firematic & firematic PELLET 36-38
Hand filling and suction hoppers incl. accessories for pellets 39

Accessories T-Control 40-43

Ash discharge for firematic & firematic PELLET 44–49

3

ROOM-DISCHARGE SYSTEMS

Room-discharge systems for pellets
Flexible screw systems for pellets 50–57
Suction systems for pellets 58-59
System bag silo with discharge systems 60-65

Room-discharge systems for woodchips & pellets
Modular agitator system 66-67
Climbing screw with separate drive 68-69

4

ACCESSORIES

Accessories storage room 70-71
HERZ 3-D planning tool 72-73

Pumps & distributors 74-75

5

BUFFER / DOMESTIC HOT WATER TANKS / HOT WATER PREPARATION

Domestic hot water storage tanks 76-77
Buffer tanks 78-81
Fresh water modules 82-83
Multifunction store 84-85
Accessories 86-87

6

FORMS

Form for buffer tanks customised 88
Planning assistance for biomass systems 89-91

7

TECHNICAL DATA

Technical data wood gasification boiler 92-95
Technical data combination boiler (wood gasification - pelletboiler) 96-97
Technical data pelletboiler 98-105
Technical data woodchip-/pelletboiler 106-113

8

TERMS AND CONDITIONS

General terms and conditions of business and delivery 114-115

9

firestar

Wood gasification boiler

firestar 18	7,6-18,0	kW
firestar 20	9,0-22,0	kW
firestar 30	9,0-30,0	kW
firestar 40	9,0-40,0	kW

for log wood M25 (water content max. 25%) according to: EN ISO 17225-5: Property class A1, A2, B with length L50 and diameter D15

	firestar Model range Lambda ECO	firestar Model range Lambda	firestar Model range De Luxe
Energy efficiency class	A+	A+	A+
Boiler body with insulation	✔	✔	✔
Double vortex combustion chamber	✔	✔	✔
Exhaust gas temperature controlled power regulation	✔	✔	✔
Speed controlled ID fan	✔	✔	✔
Built-in safety heat exchanger	✔	✔	✔
Pipe heat exchanger **with integrated splitted turbulators**	✔	✔	✔
Residual heat usage	✔	✔	✔
Automatic heat exchanger cleaning	OPTIONAL	✔	✔
Ash tray & cleaning set	OPTIONAL	✔	✔
Casing installed		✔	✔
Sensor set inclusive	✔	✔	✔

	Control Lambda	Control Lambda	Control T-Control
	Electronic burning control with easy sign display/ menu navigation		operating unit with Touch-Display
Buffer management	✔	✔	✔
Control for back flow set (motor mixing valve and pump)	✔	✔	✔
Lambda probe control (for primary and secondary air)	✔	✔	✔
Combustion control	✔	✔	✔
Outside temperature regulated control for 1 mixed heating circuit (outside sensor inclusive)			✔
Control for domestic hot water preparation (via domestic hot water boiler or buffer tank with fresh water module)			✔
Motor valve control for fastrun heating of the heating circuits during the buffer loading			✔

i

With the extension modules of T-Control it is possible to realise several possibilities (due to customers request and exisiting hydraulic system) and build up a complete heating control system.
In heat generators with T-Control following extension modules are possible: 2 internal modules und 30 external modules

firestar - Lambda ECO

	Model range	Art. No.	€	G
HERZ firestar 18	Lambda ECO	K030180-404		A3
HERZ firestar 20	Lambda ECO	K030200-404		A3
HERZ firestar 30	Lambda ECO	K030300-404		A3
HERZ firestar 40	Lambda ECO	K030400-404		A3

firestar - Lambda

	Model range	Art. No.	€	G
HERZ firestar 18	Lambda	K030180-205		A
HERZ firestar 20	Lambda	K030200-305		A
HERZ firestar 30	Lambda	K030300-305		A
HERZ firestar 40	Lambda	K030400-305		A

HERZ firestar 20 with flange	Lambda	K030200-215		A
HERZ firestar 30 with flange	Lambda	K030300-215		A
HERZ firestar 40 with flange	Lambda	K030400-215		A

With flange on both sides!

pelletfire pelletburner for firestar 20, 30, 40 with flange - model range Lambda

HERZ pelletfire 20/20 pelletburner 20	(6,1-20,0 kW)	P050200-001		K
HERZ pelletfire 30/30, 40/30 pelletburner 30	(6,1-30,0 kW)	P050300-001		K

Assembly on both sides (left or right) possible. Inclusive conversion kit (from firestar Lambda to firestar De Luxe).

firestar - De Luxe

	Model range	Art. No.	€	G
HERZ firestar 18	De Luxe	K030180-105		A
HERZ firestar 20	De Luxe	K030200-105		A
HERZ firestar 30	De Luxe	K030300-105		A
HERZ firestar 40	De Luxe	K030400-105		A

HERZ firestar 20 with flange	De Luxe	K030200-205		A
HERZ firestar 30 with flange	De Luxe	K030300-205		A
HERZ firestar 40 with flange	De Luxe	K030400-205		A

With flange on both sides and preparation to retrofit a pelletburner!

pelletfire pelletburner for firestar 20, 30, 40 with flange - model range De Luxe

HERZ pelletfire 20/20 pelletburner 20	(6,1-20,0 kW)	P050200-005		K
HERZ pelletfire 30/30, 40/30 pelletburner 30	(6,1-30,0 kW)	P050300-005		K

Assembly on both sides (left or right) possible

LOG WOOD

firestar 18/20/30/40

Accessories		Art. No.	€	G
	Surcharge doors with LEFT hinge for firestar (net, without discount) *(Doors with right hinge is delivery-standard)*	X000150-000		-
	Lifting aid for firestar 18-40, pelletfire 20-40, pelletstar 10-60, pelletstar CONDENSATION 10-30, firematic 20-101 This makes it easier to lift the product off the pallet. (net, without discount)	K030201-625		-
	Thermal valve for safety heat exchanger Opening temperature: 95 °C, 3/4“ internal thread	4080216-026		Z
	Pressure switch incl. cable (length 5 m) Range of adjustment 0-6 bar, output signal 4-20 mA	4050070-758		Z
	Boiler Safety Group KSG 1” until 50 kW, consisting of: – 1” connection, pressure relief valve 1/2“ set pressure 3 bar – Automatic air vent, pressure gauge, stop valve, insulation cover The maximum working temperature is 110 °C. It is not suitable for steam!	4171200-100		Z
	3-way-switching valve for fastrun heating (according to HERZ hydraulic schemes)			
	DN 25 (k_{VS} 10)	4054072-120		Z
	DN 32 (k_{VS} 9)	W005001-940		Z

OPTIONAL for firestar Lambda of the model range ECO (NOT included in delivery)

	Surcharge automatic heat exchanger cleaning (via motor)		K030307-499	A3
	Ash tray	firestar 18	K030157-201	Z
		firestar 20-40	K030207-201	Z
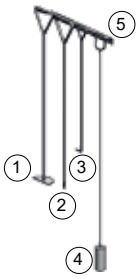	(1) Ash poker	firestar 18	K030157-205	Z
		firestar 20-40	K030207-205	Z
	(2) Cleaning rod		K030207-207	Z
	(3) Small stoker hook		K030207-206	Z
	(4) Brush		5010600-093	Z
	(5) Mounting for cleaning tools		K060357-150	Z
	Cleaning set COMPLETE (includes position 1-5)			
	firestar 18		K030157-290	Z
	firestar 20-40		K030207-290	Z

OPTIONAL for firestar model range De Luxe

	Surcharge automatic ignition integrated in firing door for firestar model range De Luxe (T-Control) 20-40 Only valid for new orders!		K030209-100	Z

LOG WOOD

firestar 18/20/30/40

Accessories	Art. No.	€	G

Back flow sets

The calculations for the back flow sets refer to a temperature difference of ΔT= 15 K and a reserve pressure of 5 kPa for the flow-variable distance. The interpretation of the back flow set for the boiler has to be checked by the planner or installer and adjusted if necessary.

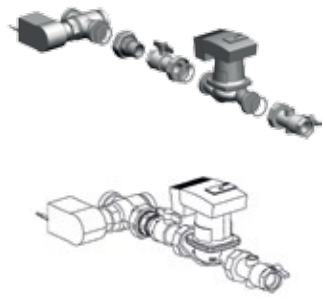

Back flow set (delivered unassembled) with 3-way-motor mixing valve **with or without pump**

≤ kW	Pump	HE-pump**	kPa*	Valve	k_{VS}		
35	WILO Para 25/6 ▪	✔	11,8	1“	10	4290510-339	Z
35	Without pump	-	-	1“	10	4290510-253	Z
40	WILO Stratos Para 30/1-8	✔	54,9	5/4“	16	4290510-236	Z

Note: * residual pressure head in kPa **HE-pump = high-efficiency pump

▪ including grid connection adapter Molex to WS8 grid connector & WS8 matching connector

SERVICE HERZ firestar

Commissioning and initial training by factory customer service (net, without discount)

in Austria	X000100-000A	*	-

Commissioning charge per extension module T-Control
(only applies in combination with system commissioning) (net, without discount)

in Austria	X000132-000A	*	-

Second visit for additional training, system check and readjustment
(net, without discount)

in Austria	X000100-471A	*	-

Parameterisation of external controller
(only applies in combination with system commissioning) (net, without discount)

in Austria	X000100-475A	*	-

SERVICE HERZ pelletfire pelletburner: retrofit firestar 20, 30, 40 with flange (Lambda or De Luxe)

Assembly of the equipment pelletfire to firestar De Luxe (boiler including one discharge screw)
(without external electrical cabling and transportation into the boiler room), (net, without discount)

in Austria	X000100-250A	*	-

Assembly of the equipment pelletfire to firestar Lambda with conversion to De Luxe including discharge screw
(without external electrical cabling and transportation into the boiler room), (net, without discount)

in Austria	X000100-260A	*	-

Commissioning and initial training by factory customer service
(net, without discount)

in Austria	X000100-150A	*	-

* Assembly and comissioning prices are available in the „HERZ Service Folder“

pelletfire

Illustration: pelletfire - version right

Combination boiler wood gasification - pelletboiler

	for log wood	for pellets
pelletfire 20/20	9,0-22,0 kW	6,1-20,0 kW
pelletfire 30/30	9,0-30,0 kW	6,1-30,0 kW
pelletfire 40/30	9,0-40,0 kW	6,1-30,0 kW

for log wood M25 (water content max. 25 %) according to
- EN ISO 17225-5: Property class A1, A2, B with length L50 and diameter D15

for wood pellets (Ø 6mm) according
- EN ISO 17225-2: Property class A1
- ENplus, DINplus or Swisspellet

Energy efficiency class:	A+
Boiler body with insulation	✔
Silencer set	✔
Casing installed	✔
Speed controlled ID fan	✔
Built-in safety heat exchanger	✔
Pipe heat exchanger **with integrated splitted turbulators**	✔
Automatic heat exchanger cleaning	✔
Electronic burning control	✔
Exhaust gas temperature controlled power regulation	✔
Residual heat usage	✔
Large ash box	✔
Cleaning set	✔
Automatic ignition of log wood with pellets possible	✔
Sensor set inclusive	✔

Log wood unit with:
- Double vortex combustion chamber

Pelletburner with:
- Combustion system made of high heat resistant steel
- Stoker screw
- Automatic burner cleaning via tipping grate

Controller T-Control
Microprocessor-driven operating unit with Touch-Display

Combustion control	✔
Outside temperature regulated control for 1 mixed heating circuit (outside sensor inclusive)	✔
Buffer management module	✔
Control for domestic hot water preparation (via domestic hot water boiler or buffer tank with fresh water module)	✔
Control for back flow set (motor mixing valve and pump)	✔
Motor valve control for fastrun heating of the heating circuits during the buffer loading	✔
Lambda probe control (controls the combustion air and fuel input)	✔
Additional easy sign display menu navigation (language-independent) (inside of the door from the log wood boiler)	✔

i

With the extension modules it is possible to realise several possibilities (due to customers request and exisiting hydraulic system) and build up a complete heating control system.
In heat generators with T-Control following extension modules are possible: 2 internal modules und 30 external modules

HERZ pelletfire combination boiler	Art. No.	€	G
HERZ pelletfire 20/20 (Wood gasification boiler firestar 20, pelletburner 20),	P050200-105		K
HERZ pelletfire 30/30 (Wood gasification boiler firestar 20, pelletburner 20),	P050300-105		K
HERZ pelletfire 40/30 (Wood gasification boiler firestar 40, pelletburner 30),	P050400-105		K

Arrangement of the pelletburner right is delivery standard. Conversion of the arrangement of the pelletburner left is possible on site.

Hand filling- and suction hoppers see page 17!

Accessories	Art. No.	€	G
Surcharge doors with LEFT hinge for firestar (net, without discount) *(Doors with right hinge is delivery-standard)*	X000150-000		-
Lifting aid for firestar 18-40, pelletfire 20-40, pelletstar 10-60, pelletstar CONDENSATION 10-30, firematic 20-101 This makes it easier to lift the product off the pallet. (net, without discount)	K030201-625		-
Thermal valve for safety heat exchanger Opening temperature: 95 °C, 3/4“ internal thread	4080216-026		Z
Pressure switch incl. cable (length 5 m) Range of adjustment 0-6 bar, output signal 4-20 mA	4050070-758		Z
Boiler Safety Group KSG 1” until 50 kW, consisting of: – 1” connection, pressure relief valve 1/2“ set pressure 3 bar – Automatic air vent, pressure gauge, stop valve, insulation cover The maximum working temperature is 110 °C. It is not suitable for steam!	4171200-100		Z
3-way-switching valve for fastrun heating (according to HERZ hydraulic schemes)			
DN 25 (k_{VS} 10)	4054072-120		Z
DN 32 (k_{VS} 9)	W005001-940		Z

Back flow sets

The calculations for the back flow sets refer to a temperature difference of ΔT= 15 K and a reserve pressure of 5 kPa for the flow-variable distance. The interpretation of the back flow set for the boiler has to be checked by the planner or installer and adjusted if necessary.

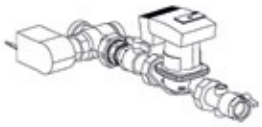

Back flow set (delivered unassembled) with 3-way-motor mixing valve **with or without pump**

≤ kW	Pump	HE-pump**	kPa*	Valve	k_{VS}		
35	WILO Para 25/6 ▪	✔	11,8	1“	10	4290510-339	Z
35	Without pump	-	-	1“	10	4290510-253	Z
40	WILO Stratos Para 30/1-8	✔	54,9	5/4“	16	4290510-236	Z

Note: * residual pressure head in kPa **HE-pump = high-efficiency pump

▪ including grid connection adapter Molex to WS8 grid connector & WS8 mating connector

Accessories		Art. No.	€	G
SERVICES HERZ pelletfire				
	Assembly of the equipment pelletfire (boiler inclusive one discharge screw) - (without: external electrical cabling and transportation into the boiler room), (net, without discount) in Austria	X000100-250A	*	-
	Commissioning and initial training by factory customer service (net, without discount) in Austria	X000100-150A	*	-
	Second visit for additional training, system check and readjustment (net, without discount) in Austria	X000100-472A	*	-

* Assembly and comissioning prices are available in the „HERZ Service Folder“

Flue pipe			
	Draft regulator, diameter 150 mm with ex-flap	4100150-113	Z
	Draft regulator diameter 150 mm	4090150-071	Z
	Draft regulator, diameter 200 mm with ex-flap	4100200-038	Z
	Draft regulator diameter 200 mm	4090200-037	Z
	Wall socket for draft regulator 150	4130150-118	Z
	Wall socket for draft regulator 200	4130200-043	Z
	Flue pipe compensator - silencer Ø 150 mm	X000401-150	Z

LOG WOOD & LOG WOOD-PELLETS

firestar & pelletfire

Accessories	Art. No.	€	G
Accessories T-Control			
	Extension modules for T-Control: With the extension modules it is possible to realise several possibilities (due to customers request and exisiting hydraulic system) and build up a complete heating control system. The following extension modules are possible for firestar De Luxe & pelletfire with T-Control: 2 internal modules und 30 external modules Internal module: BUS-cable included (from factory) External modules: BUS-cable to heat generators and to connect the individual external modules is not included!		
	Extension module **„heating circuit“** for T-Control (outside temperature regulation control incl. sensor set) INTERNAL 2 PT1000 sensor inputs: flow and back flow 1 room sensor input: for remote control FBR 1 3 relay outputs 230 VAC: pump and mixer	P020300-335	Z
	EXTERNAL (in wall-mounted box) 3 sensor inputs PT1000: flow and back flow, outside temperature 1 room sensor input: for remote control FBR 1 3 relay outputs 230 VAC: pump and mixer	P020300-450	Z
	Outside temperature sensor (PT1000) in a casing for controller T-Control for regulation due to the outside temperature (heating curve). For each external “heating circuit” module one outside temperature sensor is possible.	4057001-010	Z
	Extension module **„solar circuit“** for T-Control (according to the scheme based on the HERZ guidelines, incl. sensor set) INTERNAL 4 PT 1000 sensor inputs: flow and back flow, tank 1 + 2 1 speed-controlled pump output 230 VAC (this output is not usable for HE-pumps) 2 relay outputs 230 VAC: pump or mixer / changeover valve	P020300-350	Z
	EXTERNAL (in wall-mounted box) 4 PT1000 sensor inputs: flow and back flow, tank 1 + 2 1 speed-controlled pump output 230 VAC (this output is not usable for HE-pumps) 3 relay outputs 230 VAC: pump or mixer / changeover valve	P020300-400	Z
	EXTERNAL (in wall-mounted box) 4 PT1000 sensor inputs: flow and back flow, tank 1 + 2 1 pulse width modulation output for speed controlled pump 3 relay outputs 230 VAC: pump or mixer / changeover valve	P020300-401	Z
	Extension module **„buffer“** for T-Control (incl. sensor set) INTERNAL 3 PT1000 sensor inputs: buffer temperature top/middle/ bottom 3 relay outputs 230 VAC: pump or mixer / changeover valve	P020300-340	Z
	EXTERNAL (in wall-mounted box) 4 PT1000 sensor inputs: buffer temperature top/middle/bottom, outside temperature 3 relay outputs 230 VAC: pump and mixer / changeover valve	P020300-500	Z
	Extension module **„hot water tank“** for T-Control (incl. sensor set) INTERNAL 2 PT1000 sensor inputs: boiler and circulation 2 relay outputs 230 VAC: boiler pump and circulation pump	P020300-345	Z
	EXTERNAL (in wall-mounted box) 2 PT1000 sensor inputs: boiler and circulation 2 relay outputs 230 VAC: boiler pump and circulation pump	P020300-550	Z

Accessories		Art. No.	€	G
Accessories T-Control				
	Extension module **„external requirement“** for T-Control (incl. sensor package) EXTERNAL (in wall-mounted box) Requirement via analog input 4-20 mA and digital input	P020300-660		Z
	INTERNAL extension module **„net pump“**, **„hydraulic compensator (shunt)“** or **„zone valve“** for T-Control (incl. sensor set) **„Net pump“** 1 PT1000 sensor input: net pump temperature 3 relay outputs 230 VAC: net pump and mixer **„Hydraulic compensator (shunt)“** 1 PT1000 sensor input: hydraulic compensator temperature (shunt) 2 relay outputs 230 VAC: pump 1 / changeover valve + pump 2 **„Zone valve control“** 1 relay output 230 VAC: zone valve	P020300-355		Z
	EXTERNAL extension module **„net pump“**, **„hydraulic compensator (shunt)“** or **„zone valve“** for T-Control (in wall-mounted box, incl. sensor set) **„Net pump“** 1 PT1000 sensor input: net pump temperature 3 relay outputs 230 VAC: net pump and mixer **„Hydraulic compensator (shunt)“** 1 PT1000 sensor input: hydraulic compensator temperature (shunt) 2 relay outputs 230 VAC: pump 1 / changeover valve + pump 2 **„Zone valve control“** 1 relay output 230 VAC: zone valve	P020300-650		Z
	EXTERNAL **„pump extension module PWM or 0-10 Volt“** (in wall-mounted box) For speed controlling of the back flow pump for boilers with T-Control or for speed control of the pump of the additional boiler (schemes WE6 and WE8 regarding to regulation QM Heizwerke).	P020300-668		Z
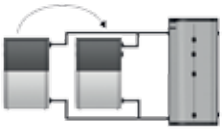	Extension module **„automatic switch for second/additional boiler”** for T-Control (according to the scheme based on the HERZ guidelines, incl. sensor set) EXTERNAL (in wall-mounted box) 2 PT1000 sensor inputs: exhaust temperature and boiler temperature of the additional boiler 1 relay output 230 VAC: boiler pump of the additional boiler 1 relay output potential free: for burner request additional boiler	P020300-600		Z
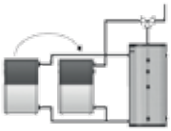	Extension module **„automatic switch for additional boiler for buffer bypassing”** for T-Control (according to the scheme based on the HERZ guidelines, incl. sensor set) EXTERNAL (in wall-mounted box) 3 PT1000 sensor inputs: exhaust temperature, boiler temperature of the additional boiler and hydraulic compensator temperature 2 relay outputs 230 VAC: boiler pump of the additional boiler, switching valve 1 relay output potential free: for burner request additional boiler	P020301-650		Z

LOG WOOD & LOG WOOD-PELLETS

firestar & pelletfire

Accessories		Art. No.	€	G
Accessories T-Control				
	External module **„external Info-Alarm“** for T-Control (in wall-mounted box) 11 inputs: 8 digital (+24VDC), 3 analog (2x 4-20 mA, 1x 0-10 V) 8 outputs: 4x 230 VAC relay outputs, 4x 24 VDC	P020300-675		Z
	Flue gas temperature guard for locking the boiler (sends “Burner-Stop” if the second boiler produces heat)	5010130-288		Z
	Surcharge remote visualisation for T-Control via smartphone, PC or tablet The handling is the same as in the Touch-Control directly on the boiler. The processes and parameters can be read and modified any time from anywhere. **Note:** The network connection has to be done by an external IT provider or IT company and a fixed IP address is required. A declaration of consent has to be signed by the user/ operator or owner of the heating system.	X000100-750		Z
	Remote control, FBR 1 including room sensor for outside temperature regulation control (for T-Control)	4056010-001		Z
	Commissioning charge per extension module T-Control (heating circuit, hot water tank, buffer, solar, external requirement, netpump) (only applies in combination with system commissioning) (net, without discount) in Austria	X000132-000A	*	-
External controller				
	Control set Lago 0321 – digital outside temperature regulation control for 2 heating circuits (one mixing valve), hot water tank control, burner request, for external wall mounting	4055720-001		Z
	Operating module for Lago	4056011-050		Z
	Parameterisation of external controller (only applies in combination with commissioning) (net, without discount) in Austria	X000100-475A	*	-

* Assembly and comissioning prices are available in the „HERZ Service Folder“

pelletstar

Pelletboiler

pelletstar 10	3,5-12,0 kW
pelletstar 20	6,1-20,0 kW
pelletstar 30	6,1-30,0 kW
pelletstar 45	13,0-45,0 kW
pelletstar 60	13,0-60,0 kW

for wood pellets (Ø 6mm) according
- EN ISO 17225-2: Property class A1
- ENplus, DINplus or Swisspellet

	pelletstar model range ECO	pelletstar with T-Control
Energy efficiency class:	A+	
Boiler body with insulation	✔	
Silencer set	✔	
Combustion system made of high heat resistant steel	✔	
Casing installed	✔	
Stoker screw	✔	
Speed controlled ID fan	✔	
Automatic burner cleaning via tipping grate	✔	
Automatic heat exchanger cleaning	✔	
Residual heat usage	✔	
Large ash box	✔	
Automatic ignition	✔	
Sensor set inclusive	✔	

pelletstar 45 & 60: inclusive built-in safety heat exchanger

	Control Lambda	Control T-Control
	Electronic burning control with easy sign display/menu navigation	Microprocessor-driven operating unit with Touch-Display
Buffer management	✔	✔
Control for back flow set (motor mixing valve and pump)	✔	✔
Lambda probe control (for primary and secondary air)	✔	✔
Combustion control	✔	✔
Outside temperature regulated control for 1 mixed heating circuit (outside sensor inclusive)		✔
Control for domestic hot water preparation (via domestic hot water boiler or buffer tank with fresh water module)		✔
Motor valve control for fastrun heating of the heating circuits during the buffer loading		✔

i With the extension modules it is possible to realise several possibilities (due to customers request and exisiting hydraulic system) and build up a complete heating control system.
In heat generators with T-Control following extension modules are possible: 2 internal modules und 30 external modules

pelletstar - ECO*	Model range	Art. No.	€	G
HERZ pelletstar 10	ECO	P031100-051		B3
HERZ pelletstar 20	ECO	P031200-051		B3
HERZ pelletstar 30	ECO	P031300-051		B3
HERZ pelletstar 45	ECO	P031500-051		B3
HERZ pelletstar 60	ECO	P031600-051		B3

* Discontinued model by ~März 2022; a written notice of termination will be given 2 months before the expiry!

pelletstar with T-Control	Art. No.	€	G
HERZ pelletstar 10	P030100-051		B
HERZ pelletstar 20	P030200-051		B
HERZ pelletstar 30	P030300-051		B
HERZ pelletstar 45	P030500-051		B
HERZ pelletstar 60	P030600-051		B

Accessories	Art. No.	€	G
Lifting aid for firestar 18-40, pelletfire 20-40, pelletstar 10-60, pelletstar CONDENSATION 10-30, firematic 20-101 This makes it easier to lift the product off the pallet. (net, without discount)	K030201-625		-
Thermal valve for safety heat exchanger Opening temperature: 95 °C, 3/4“ internal thread **NOTE:** not required for pelletstar 10-30 !	4080216-026		Z
Pressure switch incl. cable (length 5 m) Range of adjustment 0-6 bar, output signal 4-20 mA	4050070-758		Z
Boiler Safety Group KSG 1” until 50 kW, consisting of: – 1” connection, pressure relief valve 1/2“ set pressure 3 bar – Automatic air vent, pressure gauge, stop valve, insulation cover The maximum working temperature is 110 °C. It is not suitable for steam!	4171200-100		Z
3-way-switch valve for fastrun heating (according to HERZ hydraulic schemes)			
DN 25 (k_{VS} 10)	4054072-120		Z
DN 32 (k_{VS} 9)	W005001-940		Z

Back flow sets

The calculations for the back flow sets refer to a temperature difference of ΔT= 15 K and a reserve pressure of 5 kPa for the flow-variable distance.The interpretation of the back flow set for the boiler has to be checked by the planner or installer and adjusted if necessary.

Back flow set (delivered unassembled) with 3-way-motor mixing valve **with or without pump**

≤ kW	Pump	HE-pump**	kPa*	Valve	k_{VS}		
35	WILO Para 25/6 ▪	✔	11,8	1“	10	4290510-339	Z
35	Without pump	-	-	1“	10	4290510-253	Z
40	WILO Stratos Para 30/1-8	✔	54,9	5/4“	16	4290510-236	Z
45	WILO Stratos Para 30/1-8	✔	53	5/4“	16	4290510-236	Z
60	WILO Stratos Para 30/1-8	✔	24,5	5/4“	16	4290510-236	Z

Note: *H = residual pressure head in kPa **HE-pump = high-efficiency pump
▪ including grid connection adapter Molex to WS8 grid connector & WS8 mating connector

Accessories		Art. No.	€	G
Flue pipe				
	Draft regulator, diameter 150 mm with ex-flap	4100150-113		Z
	Draft regulator diameter 150 mm	4090150-071		Z
	Draft regulator, diameter 200 mm with ex-flap	4100200-038		Z
	Draft regulator diameter 200 mm	4090200-037		Z
	Wall socket for draft regulator 150	4130150-118		Z
	Wall socket for draft regulator 200	4130200-043		Z
	Flue pipe compensator - silencer			
	Ø 130 mm	X000401-130		Z
	Ø 150 mm	X000401-150		Z
SERVICES HERZ pelletfire				
	Assembly **pelletstar 10-60 für for screw discharge or manual filling** (boiler including one discharge screw) - (without external electrical cabling and transportation into the boiler room) (net, without discount)			
	in Austria	X000100-203A	*	-
	Komplettierung **pelletstar 10-60 for suction discharge** (boiler including one discharge screw) - (without external electrical cabling and transportation into the boiler room) (net, without discount)			
	in Austria	X000100-204A	*	-
	Commissioning and initial training by factory customer service (net, without discount)			
	in Austria	X000100-101A	*	-
	Commissioning charge per extension module T-Control (heating circuit, hot water tank, buffer, solar, external requirement, netpump) - (only applies in combination with system commissioning) (net, without discount)			
	in Austria	X000132-000A	*	-
	Second visit for additional training, system check and readjustment (net, without discount)			
	in Austria	X000100-472A	*	-

* Assembly and comissioning prices are available in the „HERZ Service Folder“

Accessories

	Art. No.	€	G
Hand filling and suction hoppers for pellet boilers	**LxWxH (mm)**		
	Hand filling hopper FLEX for pelletstar 10-60, pelletfire 20-40, pelletstar CONDENSATION 10-101, firematic 20-201, firematic PELLET 120-201, firematic CONDENSATION 30-40		
	ca. 225 litres / 146 kg pellets 440x440x1520	P030303-016	Z
	ca. 740 litres / 480 kg pellets 600x1200x1520	P032673-000	Z
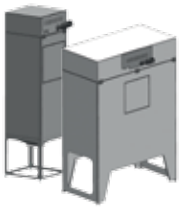	Suction hopper FLEX for pelletstar 10-60, pelletfire 20-40, pelletstar CONDENSATION 10-101		
	ca. 140 litres / 91 kg pellets 440x440x1675	P030303-015	Z
	Suction hopper FLEX inclusive external controller for pelletstar 10-60, pelletfire 20-40, pelletstar CONDENSATION 10-101, firematic 20-201, firematic 120-201 PELLET, firematic CONDENSATION 30-40		
	ca. 350 litres / 225 kg pellets 600x1200x1725	P032673-011	Z
	Note: All wirings from the control box to the motors have to be done on the reference site.		
	Double-suction hopper FLEX inclusive external controller for pelletstar 10-60, pelletfire 20-40, pelletstar CONDENSATION 10-101, firematic 20-201, firematic PELLET 120-201 , firematic CONDENSATION 30-40		
	ca. 385 litres / 250 kg pellets 600x1200x1725	P032673-006	Z
	Note: All wirings from the control box to the motors have to be done on the reference site.		
	Flexible screw up to 30 kW for hand filling and suction hopper FLEX includes: 1,2 m tube, 1,4 m screw, transfer head to BFP-flap incl. motor (pushing), hopper removal unit **Attention:** Not expandable!		
	pelletstar 10-30, pelletfire 20-40, pelletstar CONDENSATION 10-30	P032373-200	Z
	The removal unit can be rotated 360° horizontally and vertically from 0-30°!		
	Basic set "flexible screw" for hand filling and suction hopper FLEX includes: 2 m tube, 2,4 m screw, transfer head to BFP-flap incl. motor (pushing), hopper removal unit **Info:** Expendable till max. 5,5 metres!		
	≤ **60 kW:** pelletstar 10-60, pelletfire 20-40, pelletstar CONDENSATION 10-60, firematic 20-60, firematic CONDENSATION 30-40	P032673-200	Z
	≤ **201 kW:** pelletstar 10-60, pelletfire 20-40, pelletstar CONDENSATION 10-101, firematic 20-201, firematic PELLET 120-201 , firematic CONDENSATION 30-40	P032673-202	Z
	The removal unit can be rotated 360° horizontally and vertically from 0-30°!		
	Transport tube or chute pipe (per metre)	5020760-000	L
	Flexible screw (per metre)	5016102-160	L
	Cyclone separator with dust collector for the installation in the return air lines of the pellet suction transfer system	P030309-100	L

Attention: When combining **pelletstar CONDENSATION 10-101** with external hoppers, the completion set "screw system" is necessary! See page 19

pelletstar CONDENSATION

Pelletboiler with condensing technology

pelletstar CONDENSATION 10	3,2 - 10,0 kW
pelletstar CONDENSATION 16	3,2 - 16,0 kW
pelletstar CONDENSATION 20	6,0 - 20,0 kW
pelletstar CONDENSATION 30	6,0 - 30,0 kW
pelletstar CONDENSATION 45	13,0 - 45,0 kW
pelletstar CONDENSATION 60	13,0 - 60,0 kW
pelletstar CONDENSATION 80	24,0 - 80,0 kW
pelletstar CONDENSATION 100	24,0 - 99,0 kW
pelletstar CONDENSATION 101	24,0 - 101,0 kW

for wood pellets (Ø 6mm) according
- EN ISO 17225-2: Property class A1
- ENplus, DINplus or Swisspellet

pelletstar CONDENSATION 10-60 (Boiler basic set)

pelletstar CONDENSATION 80-101 (Boiler basic set)

Energy efficiency class:	A++	A++
Boiler body made of stainless steel with efficient insulation	✔	✔
Silencer set	✔	✔
High heat resistant stainless steel combustion chamber	✔	
High temperature resistant stainless steel burning chamber		✔
Casing installed	✔	✔
Under-pressure control	✔	✔
Integrated lambda probe	✔	✔
Electronic controlled ID fan	✔	✔
Automatic burner cleaning via tipping grate	✔	✔
Automatic heat exchanger cleaning	✔	✔
Residual heat usage	✔	✔
Large ash box	✔	✔
Automatic ignition	✔	✔
Sensor set inclusive	✔	✔
Efficient flow temperature-control via variable pump speed (PWM signal)	✔	Optional with an external module possible.

pelletstar CONDENSATION 45-101: including built-in safety heat exchanger

Controller T-Control:
Integrated microprocessor-driven operating unit with Touch-Display

Combustion control	✔	✔
Buffer management module	✔	✔
Control for domestic hot water preparation (via hot water tank or buffer with fresh water modul)	✔	✔
Flow temperature booster during domestic hot water preparation (pump and mixer valve)	✔	✔
Lambda probe control (controls the combustion air and fuel input)	✔	✔

With the extension modules it is possible to realise several possibilities (due to customers request and exisiting hydraulic system) and build up a complete heating control system.

In heat generators with T-Control following extension modules are possible:

pelletstar CONDENSATION 10-16:	1 internal und 30 external modules
pelletstar CONDENSATION 20-60:	1 internal und 30 external modules
pelletstar CONDENSATION 80-101:	2 internal und 30 external modules

pelletstar CONDENSATION - boiler basic set modular

	performance	Art. No.	€	G
HERZ pelletstar CONDENSATION 10	modular	P056100-005		B2
HERZ pelletstar CONDENSATION 16	modular	P056160-005		B2
HERZ pelletstar CONDENSATION 20	modular	P056200-005		B2
HERZ pelletstar CONDENSATION 30	modular	P056300-005		B2
HERZ pelletstar CONDENSATION 45	modular	P056450-005		B2
HERZ pelletstar CONDENSATION 60	modular	P056600-005		B2
HERZ pelletstar CONDENSATION 80 - right	modular	P055800-005		C4
HERZ pelletstar CONDENSATION 80 - left	modular	P055800-006		C4
HERZ pelletstar CONDENSATION 100 - right	modular	P051000-005		C4
HERZ pelletstar CONDENSATION 100 - left	modular	P051000-006		C4
HERZ pelletstar CONDENSATION 101 - right	modular	P051010-005		C4
HERZ pelletstar CONDENSATION 101 - left	modular	P051010-006		C4

Completion set screw discharge system

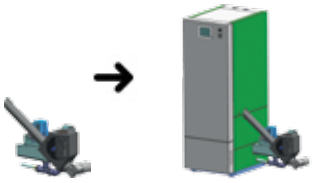

		Art. No.	€	G
Completion set „screw discharge system" includes:		Stoker screw, BFP-flap , ID fan, condensate drip tray, condensate train, casing		
for pelletstar CONDENSATION 10-16	modular	P056160-015		B2
for pelletstar CONDENSATION 20-30	modular	P056300-015		B2
for pelletstar CONDENSATION 45-60	modular	P056600-015		B2

The pelletstar CONDENSATION 10-60 is standard for the fuel insert RIGHT pre-built. If the insert is required on the left side, the cumbustion chamber can be converted to left on site!

for pelletstar CONDENSATION 80-101	modular	P051010-015		C4

Completion set suction discharge system

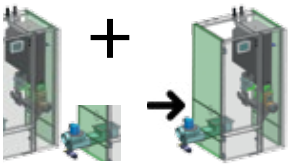

		Art. No.	€	G
Completion set „suction discharge system" includes:		Suction hopper (10-30: ~56 litres, 45-60: ~90 litres), Stoker screw, ID fan, condensate drip tray, condensate train, casing		
for pelletstar CONDENSATION 10-16	modular	P056160-025		B2
for pelletstar CONDENSATION 20-30	modular	P056300-025		B2
for pelletstar CONDENSATION 45-60	modular	P056600-025		B2

Cyclone separator with dust collector for the installation in the return air lines of the pellet suction transfer system see page 17

Suction system pelletstar CONDENSATION 80-101:
Hand filling and suction hopper for pelletstar CONDENSATION 80-101 see page 17
ATTENTION: When combining pelletstar CONDENSATION 10-101 with external hoppers, the completion set "screw discharge system" is necessary!

Completion set hand filling system

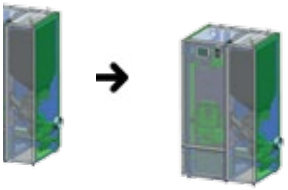

		Art. No.	€	G
Completion set „hand filling system" includes:		Hand filling hopper system (10-30: ~106 litres, 45-60: ~150 litres), stoker screw, ID fan, condensate drip tray, condensate train, casing		
for pelletstar CONDENSATION 10-16	modular	P056160-035		B2
for pelletstar CONDENSATION 20-30	modular	P056300-035		B2
for pelletstar CONDENSATION 45-60	modular	P056600-035		B2

Hand filling system for pelletstar CONDENSATION 80-101:
Hand filling and suction hopper for pelletstar CONDENSATION 80-101 see page 17
ATTENTION: When combining pelletstar CONDENSATION 10-101 with external hoppers, the completion set "screw discharge system" is necessary!

Accessories		Art. No.	€	G
	Lifting aid for firestar 18-40, pelletfire 20-40, pelletstar 10-60, pelletstar CONDENSATION 10-30, firematic 20-101 This makes it easier to lift the product off the pallet. (net, without discount)	K030201-625		-
	Thermal valve for safety heat exchanger Opening temperature: 95 °C, 3/4" internal thread NOTE: Not required for pelletstar 10-30 !	4080216-026		Z
	Pressure switch incl. cable (length 5 m) Range of adjustment 0-6 bar, output signal 4-20 mA	4050070-758		Z
	Boiler Safety Group KSG 1" until 50 kW, consisting of: – 1" connection, pressure relief valve 1/2" set pressure 3 bar – Automatic air vent, pressure gauge, stop valve, insulation cover The maximum working temperature is 110 °C. It is not suitable for steam!	4171200-100		Z
	3-way-switching valve for fastrun heating (according to HERZ hydraulic schemes)			
	DN 25 (k_{vs} 10)	4054072-120		Z
	DN 32 (k_{vs} 9)	W005001-940		Z
	Wastewater lifting unit HF extra	5011502-002		Z
	Surcharge for combustion with outside air intake (preparation) for pelletstar CONDENSATION 10-60	P056600-260		Z
	HERZ Pumpfix direct 1" – without pump Connections to the heating circuit: 1" IT; Connections to the distributor: 5/4" ET (k_{vs} 20)	4590100-001		Z

i

The effect of the charge pumps will affect a spread of ΔT = 15 K and a calculated pressure reserve of 5 kPa. The interpretation of the pump for the boiler has to be checked by the planner or installer and adjusted if necessary.

Loading pump for controlling with PWM-signal (for efficient flow temperature-control via variable pump speed)

≤ kW	Loading pump with PWM	HE-pump**	kPa*		
10	Wilo-Para 25/7 PWM	✔	65	5011524-022	Z
16	Wilo-Para 25/7 PWM	✔	60	5011524-022	Z
20	Wilo-Para 25/7 PWM	✔	55	5011524-022	Z
30	Wilo-Para 25/7 PWM	✔	30	5011524-022	Z
45	Wilo-Stratos Para 30/8 PWM	✔	55	5011524-023	Z
60	Wilo-Stratos Para 30/8 PWM	✔	50	5011524-023	Z
80	Wilo-Stratos Para 30/12 PWM	✔	85	5011524-024	Z
101	Wilo-Stratos Para 30/12 PWM	✔	60	5011524-024	Z

Note: *H = residual pressure head in kPa

****HE-pump = high-efficiency pump**

Accessories	Art. No.	€	G
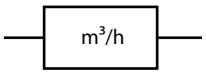	Flow sensor		
	DN 20 incl. cable (for boiler rated output 10-30 kW)	4050072-020	Z
	DN 25 incl. cable (for boiler rated output 45-101 kW)	4050072-025	Z

2

SERVICES HERZ pelletstar CONDENSATION				
	Assembly pelletstar CONDENSATION for screw discharge **or hand filling** (boiler including one discharge screw - without external electrical cabling and transportation into the boiler room) (net, without discount) in Austria			
	pelletstar CONDENSATION 10-60	X000100-205A	*	-
	pelletstar CONDENSATION 80-101	X000100-202A	*	-
	Assembly pelletstar CONDENSATION suction discharge (boiler including one discharge - without external electrical cabling and transportation into the boiler room) (net, without discount) in Austria			
	pelletstar CONDENSATION 10-60	X000100-206A	*	-
	pelletstar CONDENSATION 80-101	X000100-207A	*	-
	Commissioning and initial training by factory customer service (net, without discount)			
	pelletstar CONDENSATION 10-60	X000100-101A	*	-
	pelletstar CONDENSATION 80-101	X000100-102A	*	-
	Commissioning charge per extension module T-Control (heating circuit, hot water tank, buffer, solar, external requirement, netpump) - (only applies in combination with system commissioning) (net, without discount)			
	in Austria	X000132-000A	*	-
	Second visit for additional training, system check and readjustment (net, without discount)			
	in Austria	X000100-472A	*	-

* Assembly and comissioning prices are available in the „HERZ Service Folder“

Accessories			Art. No.	€	G
Chimney connection pipe made of stainless steel					
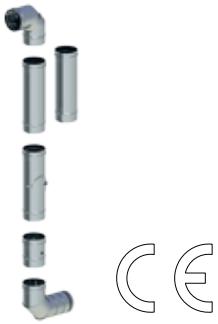	HERZ Chimney connection pipe KS	set consisting of: • 2 pcs. length element 500 mm • 1 pc. length element with measuring socket • 1 pc. bend 87° with cleaning • 1 pc. test element with universal cap • 1 pc. boiler connection bend 87° shortenable • 6 pcs. FKM seal for system KS (inserted)			
		Ø 130 mm	KS11913-001		Z
		Ø 150 mm	KS11915-001		Z
		Ø 180 mm	KS11918-001		Z
	Boiler connection bend 87° shortenable	Ø 130 mm	KS11013-877		Z
		Ø 150 mm	KS11015-877		Z
		Ø 180 mm	KS11018-877		Z
	Boiler connection bend 45°	Ø 130 mm	KS11013-457		Z
		Ø 150 mm	KS11015-457		Z
		Ø 180 mm	KS11018-457		Z
	Boiler connection element straight L=150 mm		KS11615-000		Z
	Reduction conical 130E/113W		KS11413-111		Z
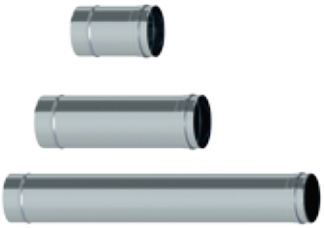	Length element 250 mm	Ø 130 mm	KS11113-025		Z
		Ø 150 mm	KS11115-025		Z
		Ø 180 mm	KS11118-025		Z
	Length element 500 mm	Ø 130 mm	KS11113-050		Z
		Ø 150 mm	KS11115-050		Z
		Ø 180 mm	KS11118-050		Z
	Length element 1000 mm	Ø 130 mm	KS11113-100		Z
		Ø 150 mm	KS11115-100		Z
		Ø 180 mm	KS11118-100		Z
	Length element with measuring socket	Ø 130 mm	KS11313-003		Z
		Ø 150 mm	KS11315-003		Z
		Ø 180 mm	KS11318-003		Z
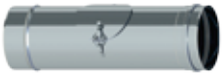	Test element with universal cap	Ø 130 mm	KS11313-021		Z
		Ø 150 mm	KS11315-021		Z
		Ø 180 mm	KS11318-021		Z
	Bend 87° with cleaning	Ø 130 mm	KS11013-872		Z
		Ø 150 mm	KS11015-872		Z
		Ø 180 mm	KS11018-872		Z
	Bend 87° with cleaning lateral (right)	Ø 130 mm	KS11013-458		Z
		Ø 150 mm	KS11015-458		Z
		Ø 180 mm	KS11018-458		Z
	Bend 45°	Ø 130 mm	KS11013-459		Z
		Ø 150 mm	KS11015-459		Z
		Ø 180 mm	KS11018-459		Z
	Lubricant		KS11300-001		Z

NOTES

2

Accessories	Art. No.	€	G
Accessories T-Control			
Extension modules for T-Control: With the extension modules it is possible to realise several possibilities (due to customers request and exisiting hydraulic system) and build up a complete heating control system. The following extension modules are possible for pelletstar & pelletstar CONDENSATION with T-Control: pelletstar 10-60: 2 internal modules and 30 external modules pelletstar CONDENSATION 10-16: 1 internal module and 30 external modules pelletstar CONDENSATION 20-60: 1 internal module and 30 external modules pelletstar CONDENSATION 20-60: 2 internal modules and 30 external modules Internal module: BUS-cable included (from factory) External modules: BUS-cable to heat generators an to connect the individual external modules is not included!			
Extension module „heating circuit“ for T-Control (outside temperature regulation control incl. sensor set)			
INTERNAL 2 PT1000 sensor inputs: flow and back flow 1 room sensor input: for remote control FBR 1 3 relay outputs 230 VAC: pump and mixer	P020300-335		Z
EXTERNAL (in wall-mounted box) 3 sensor inputs PT1000: flow and back flow, outside temperature 1 room sensor input: for remote control FBR 1 3 relay outputs 230 VAC: pump and mixer	P020300-450		Z
Outside temperature sensor (PT1000) in a casing for controller T-Control for regulation due to the outside temperature (heating curve). For each external “heating circuit” module one outside temperature sensor is possible.	4057001-010		Z
Extension module „solar circuit“ for T-Control (according to the scheme based on the HERZ guidelines, incl. sensor set)			
INTERNAL 4 PT 1000 sensor inputs: flow and back flow, tank 1 + 2 1 speed-controlled pump output 230 VAC (this output is not usable for HE-pumps) 2 relay outputs 230 VAC: pump or mixer / changeover valve	P020300-350		Z
EXTERNAL (in wall-mounted box) 4 PT1000 sensor inputs: flow and back flow, tank 1 + 2 1 speed-controlled pump output 230 VAC (this output is not usable for HE-pumps) 3 relay outputs 230 VAC: pump or mixer / changeover valve	P020300-400		Z
EXTERNAL (in wall-mounted box) 4 PT1000 sensor inputs: flow and back flow, tank 1 + 2 1 pulse width modulation output for speed controlled pump 3 relay outputs 230 VAC: pump or mixer / changeover valve	P020300-401		Z
Extension module „buffer“ for T-Control (incl. sensor set)			
INTERNAL 3 PT1000 sensor inputs: buffer top middle, bottom 3 relay outputs 230 VAC: pump or mixer / changeover valve	P020300-340		Z
EXTERNAL (in wall-mounted box) 4 PT1000 sensor inputs: buffer temperature top/middle/bottom, outside temperature 3 relay outputs 230 VAC: pump and mixer / changeover valve	P020300-500		Z
Extension module „hot water tank“ for T-Control (incl. sensor set)			
INTERNAL 2 PT1000 sensor inputs: boiler and circulation 2 relay outputs 230 VAC: boiler pump and circulation pump	P020300-345		Z
EXTERNAL (in wall-mounted box) 2 PT1000 sensor inputs: boiler and circulation 2 relay outputs 230 VAC: boiler pump and circulation pump	P020300-550		Z

Accessories		Art. No.	€	G
Accessories T-Control				
	Extension module „external requirement“ for T-Control (incl. sensor package) EXTERNAL (in wall-mounted box) Requirement via analog input 4-20 mA and digital input	P020300-660		Z
	INTERNAL extension module „net pump“ , „hydraulic compensator (shunt)“ or „zone valve“ for T-Control (incl. sensor set) „Net pump“ 1 PT1000 sensor input: net pump temperature 3 relay outputs 230 VAC: net pump and mixer „Hydraulic compensator (shunt)“ 1 PT1000 sensor input: hydraulic compensator temperature (shunt) 2 relay outputs 230 VAC: pump 1 / changeover valve + pump 2 „Zone valve control“ 1 relay output 230 VAC: zone valve	P020300-355		Z
	EXTERNAL extension module „net pump“ , „hydraulic compensator (shunt)“ or „zone valve“ for T-Control (in wall-mounted box, incl. sensor set) „Net pump“ 1 PT1000 sensor input: net pump temperature 3 relay outputs 230 VAC: net pump and mixer „Hydraulic compensator (shunt)“ 1 PT1000 sensor input: hydraulic compensator temperature (shunt) 2 relay outputs 230 VAC: pump 1 / changeover valve + pump 2 „Zone valve control“ 1 relay output 230 VAC: zone valve	P020300-650		Z
	EXTERNAL „ pump extension module PWM or 0-10 Volt“ (in wall-mounted box) For speed controlling of the back flow pump for boilers with T-Control or for speed control of the pump of the additional boilers (schemes WE6 and WE8 regarding to regulation QM Heizwerke).	P020300-668		Z
	Cascade connection for T-Control (terminal & activation) per boiler Necessary for each boiler in the cascade! Up to 8 boilers in cascade are possible. (according to the scheme based on the HERZ guidelines)			
	for new boilers	7070000-300		Z
	for an existing boiler (retrofit)	7070000-250		Z
	Ethernet Switch (8 ports) for cascade connection of the boiler From a cascade of 3 boilers the switch is required. The ethernet - cabling (CAT 5 cable or higher, not included in delivery) has to be done on site ! (according to the scheme based on the HERZ guidelines)	7070000-301		Z

2

Accessories		Art. No.	€	G
Accessories T-Control				
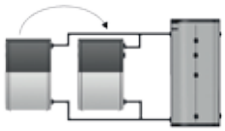	Extension module „automatic switch for second/additional boiler" for T-Control (according to the scheme based on the HERZ guidelines, incl. sensor set) EXTERNAL (in wall-mounted box) 2 PT1000 sensor inputs: exhaust temperature and boiler temperature of the additional boiler 1 relay output 230 VAC: boiler pump of the additional boiler 1 relay output potential free: for burner request additional boiler	P020300-600		Z
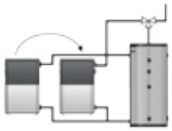	Extension module „automatic switch for additional boiler for buffer bypassing" for T-Control (according to the scheme based on the HERZ guidelines, incl. sensor set) EXTERNAL (in wall-mounted box) 3 PT1000 sensor inputs: exhaust temperature, boiler temperature of the additional boiler and hydraulic compensator temperature 2 relay outputs 230 VAC: boiler pump of the additional boiler, switching valve 1 relay output potential free: for burner request additional boiler	P020301-650		Z
	External module „external Info-Alarm" for T-Control (in wall-mounted box) 11 inputs: 8 digital (+24 VDC), 3 analog (2x 4-20 mA, 1x 0-10 V) 8 outputs: 4x 230 VAC relay outputs, 4x 24 VDC	P020300-675		Z
	Flue gas temperature guard for locking the boiler (sends "Burner-Stop" if the second boiler produces heat)	5010130-288		Z
	Surcharge remote visualisation for T-Control via smartphone, PC or tablet The handling is the same as in the Touch-Control directly on the boiler. The processes and parameters can be read and modifi ed any time from anywhere. Note: The network connection has to be done by an external IT provider or IT companies and a fixed IP address is required. A declaration of consent has to be signed by the user/operator or owner of the heating system.	X000100-750		Z
	i - FBR digital room unit, visualise, operate and observe 3,5" TFT colour display, CAN-communication, internal temperature and humidity sensor Note: Compatible with boiler with T-Control 7" display			
	24 V (HZS 352)	5120300-327		G
	230 V (HZS 351)	5120300-326		G
	Remote control, FBR 1 including room sensor for outside temperature regulation control (for T-Control)	4056010-001		Z

2

Accessories		Art. No.	€	G
	Telephone breakdown reporting device (landline connection) which conveys pre-recorded text or spoken message	3301301-000		Z
	GSM phone fault reporting device (2 inputs, 2 outputs) Reports SMS message, including power supply 230 V and the module for uninterruptable power supply with battery, waterproof housing for outdoor installation IP68, up to 5 mobile phones can be saved (SIM card not included in the price) Necessary SIM-card size: Nano-SIM	3301302-001		Z
	OPTIONAL: if mobile reception is bad, Antenna for GSM fault reporting device	3301302-005		Z
	Commissioning for telephone breakdown (landline connection or mobile phone) (only applies in combination with system commissioning) (net, without discount)			
	in Austria	X000100-900A	*	-
	Commissioning charge per extension module T-Control (heating circuit, hot water tank, buffer, solar, external requirement, netpump) (only applies in combination with system commissioning) (net, without discount)			
	in Austria	X000132-000A	*	-

* Assembly and comissioning prices are available in the „HERZ Service Folder“

External controller				
	Control set Lago 0321 – digital outside temperature regulation control for 2 heating circuits (one mixing valve), hot water tank control, burner request, for external wall mounting	4055720-001		Z
	Operating module for Lago	4056011-050		Z
	Parameterisation of external controller (only applies in combination with commissioning) (net, without discount)			
	in Austria	X000100-475A	*	-

* Assembly and comissioning prices are available in the „HERZ Service Folder“

firematic CONDENSATION

Wood chip boiler with condensing technology

firematic CONDENSATION 30	9,0-30,0	kW
firematic CONDENSATION 40	9,0-40,0	kW

Wood pellets (Ø 6mm) according to
- EN ISO 17225-2: Property class A1
- ENplus, DINplus or Swisspellet

Wood chips M40
(water content max. 40%) according to
- EN ISO 17225-4: Property class A1, A2, B1 and particle size P16S

Illustration: firematic CONDENSATION

Energy efficiency class:	A++
Boiler body made of stainless steel with efficient insulation	✔
Silencer set for boiler body	✔
High temperature resistant stainless steel burning chamber	✔
Casing installed	✔
Under pressure monitoring	✔
Integrated lambda probe	✔
Electronic controlled ID fan	✔
Automatic burner cleaning via tipping grate	✔
Automatic heat exchanger cleaning	✔
Residual heat usage	✔
Back-burn safety unit BFP-flap with self-closing fire protection flap	✔
Level monitored interim hopper	✔
Large ash box	✔
Automatic ignition	✔
Sensor set inclusive	✔

Controller T-Control
Microprocessor-driven operating unit with Touch-Display

Combustion control	✔
Outside temperature regulated control for 1 mixed heating circuit (outside sensor inclusive)	✔
Buffer management module	✔
Control for domestic hot water loading (via hot water tank or buffer with fresh water module)	✔
Flow temperature booster during domestic hot water preparation (pump and mixing valve)	✔
Lambda probe control (controls the combustion air and fuel input)	✔

i

With the extension modules it is possible to realise several possibilities (due to customers request and exisiting hydraulic system) and build up a complete heating control system.

In heat generators with T-Control following extension modules are possible: 1 internal module & 30 external modules

HERZ firematic CONDENSATION

	Art. No.	€	G
HERZ firematic CONDENSATION 30 - right	H055300-001		C4
HERZ firematic CONDENSATION 30 - left	H055300-002		C4
HERZ firematic CONDENSATION 40 - right	H055400-001		C4
HERZ firematic CONDENSATION 40 - left	H055400-002		C4

Delivery includes: boiler incl. BFP-flap and stoker screw, Touch-Control

3

Accessories

		Art. No.	€	G
	Thermal valve for safety heat exchanger Opening temperature: 95 °C, 3/4" internal thread	4080216-026		Z
	Pressure switch incl. cable (length 5 m) Range of adjustment 0-6 bar, output signal 4-20 mA	4050070-758		Z
	Boiler Safety Group KSG 1" until 50 kW, consisting of: – 1" connection, pressure relief valve 1/2" set pressure 3 bar – Automatic air vent, pressure gauge, stop valve, insulation cover The maximum working temperature is 110 °C. It is not suitable for steam!	4171200-100		Z
	3-way-switching valve for fastrun heating (according to HERZ hydraulic schemes)			
	DN 25 (k_{vs} 10)	4054072-120		Z
	DN 32 (k_{vs} 9)	W005001-940		Z
	Wastewater lifting unit HF extra	5011502-002		Z
	HERZ Pumpfix direct 1" – without pump Connections to the heating circuit: 1" IT; Connections to the distributor: 5/4" ET	4590100-001		Z

SERVICES HERZ firematic CONDENSATION

	Assembly (boiler including one discharge screw - without external electrical cabling and transportation into the boiler room)			
	in Austria	X000100-450A	*	-
	Commissioning and initial training by factory customer service (net, without discount)			
	in Austria	X000100-470A	*	-
	Commissioning charge per extension module T-Control (heating circuit, hot water tank, buffer, solar, external requirement, netpump) - (only applies in combination with system commissioning) (net, without discount)			
	in Austria	X000132-000A	*	-
	Second visit for additional training, system check and readjustment (net, without discount)			
	in Austria	X000100-473A	*	-

* Assembly and comissioning prices are available in the „HERZ Service Folder"

Accessories			Art. No.	€	G
Chimney connection pipe made of stainless steel					
	HERZ Chimney connection pipe KS Ø 150 mm	set consisting of: • 2 pcs. length element 500 mm • 1 pc. length element with measuring socket • 1 pc. bend 87° with cleaning • 1 pc. test element wirh universal cap • 1 pc. boiler connection bend 87° shortenable • 6 pcs. FKM seal for system KS (inserted)	KS11915-001		Z
	Boiler connection bend 87° shortenable	Ø 150 mm	KS11015-877		Z
	Boiler connection bend 45°	Ø 150 mm	KS11015-457		Z
	Reduction conical130E/113W		KS11413-111		Z
	Length element 250 mm	Ø 150 mm	KS11115-025		Z
	Length element 500 mm	Ø 150 mm	KS11115-050		Z
	Length element 1000 mm	Ø 150 mm	KS11115-100		Z
	Length element with measuring socket	Ø 150 mm	KS11315-003		Z
	Test element wirh universal cap	Ø 150 mm	KS11315-021		Z
	Bend 87° with cleaning	Ø 150 mm	KS11015-872		Z
	Bend 87° with cleaning lateral (right)	Ø 150 mm	KS11015-458		Z
	Bend 45°	Ø 150 mm	KS11015-459		Z
	Lubricant		KS11300-001		Z

NOTES

3

firematic

Illustration
firematic 20-60

Illustration
firematic 80-101

Illustration
firematic 120-201

Biomass boiler for wood chips and pellets

	for wood chips	for pellets
firematic 20	6,0-20 kW	5,9-20 kW
firematic 35	6,0-35 kW	5,9-35 kW
firematic 45	12,1-45 kW	12,6-45 kW
firematic 60	12,1-60 kW	12,6-60 kW
firematic 80	23,2-80 kW	23,2-80 kW
firematic 100	23,2-99 kW	23,2-99 kW
firematic 101	23,2-101 kW	23,2-101 kW
firematic 120	35,1-120 kW	34,8-120 kW
firematic 130	35,1-130 kW	34,8-130 kW
firematic 149	35,1-149 kW	34,8-149 kW
firematic 151	35,1-151 kW	34,8-151 kW
firematic 180	35,1-180 kW	34,8-180 kW
firematic 199	35,1-199 kW	34,8-199 kW
firematic 201	35,1-201 kW	34,8-201 kW

Wood chips M40 (water content max. 40 %) according to
- EN ISO 17225-4: Property class A1, A2, B1, and particle size P16S; from 80 kW: P16S & P31S

Wood pellets (Ø 6mm) according to
- EN ISO 17225-2: Property class A1; from 80 kW: A1 & A2
- ENplus, DINplus or Swisspellet

Energy efficiency class (valid for firematic 20-60):	A+
Boiler body with insulation	✔
Silencer set for boiler body	✔
Single stoker screw up to 101 kW or double stoker screw from 120 kW	✔
Safety heat exchanger	✔
Speed controlled ID fan	✔
Automatic burner cleaning via tipping grate up to 60 kW Step-/moving grate burning chamber from 80 to 201 kW - automatic cleaning of the grate elements - automatic cleaning of the burning ash via tipping grate	✔
Automatic heat exchanger cleaning	✔
Residual heat usage	✔
Splitted 2-zone combustion chamber	✔
Back-burn safety unit BFP-flap with self-closing fire protection flap	✔
Level monitored interim hopper	✔
Automatic ignition using hot air blower	✔
Automatic ash discharge of burning ash and fly ash into front ashbox	✔
Sensor set inclusive	✔

Controller T-Control Microprocessor-driven operating unit with Touch-Display	firematic 20-101	firematic 120-201
Combustion control	✔	✔
Outside temperature regulated control for 1 mixed heating circuit) (outside sensor inclusive)	✔	
Buffer management module	✔	✔
Control for domestic hot water preparation (via domestic hot water boiler or buffer tank with fresh water module)	✔	
Control for back flow set (motor mixing valve and pump)	✔	✔
Motor valve control for fastrun heating of the heating circuits during the buffer loading	✔	✔
Lambda probe control (controls the combustion air and fuel input)	✔	✔

i

With the extension modules it is possible to realise several possibilities (due to customers request and exisiting hydraulic system) and build up a complete heating control system.

In heat generators with T-Control following extension modules are possible:
firematic 20-101: 2 internal and 30 external modules
firematic 120-201: 4 internal and 30 external modules

HERZ firematic T-Control LEFT

	Art. No.	€	G
HERZ firematic 20	H030250-015		C1
HERZ firematic 35	H030350-015		C1
HERZ firematic 45	H030450-015		C1
HERZ firematic 60	H030650-015		C1
HERZ firematic 80	H030850-015		C1
HERZ firematic 100	H030950-015		C1
HERZ firematic 101	H031050-015		C1
HERZ firematic 120	H031250-015		C2
HERZ firematic 130	H031350-015		C2
HERZ firematic 149	H031495-015		C2
HERZ firematic 151	H031550-015		C2
HERZ firematic 180	H031850-015		C2
HERZ firematic 199	H031995-015		C2
HERZ firematic 201	H032500-015		C2

3

HERZ firematic T-Control RIGHT

	Art. No.	€	G
HERZ firematic 20	H030200-015		C1
HERZ firematic 35	H030300-015		C1
HERZ firematic 45	H030400-015		C1
HERZ firematic 60	H030600-015		C1
HERZ firematic 80	H030800-015		C1
HERZ firematic 100	H030900-015		C1
HERZ firematic 101	H031000-015		C1
HERZ firematic 120	H031200-015		C2
HERZ firematic 130	H031300-015		C2
HERZ firematic 149	H031490-015		C2
HERZ firematic 151	H031500-015		C2
HERZ firematic 180	H031800-015		C2
HERZ firematic 199	H031990-015		C2
HERZ firematic 201	H032000-015		C2

Accessories

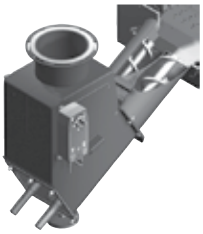

	Art. No.	€	G
Surcharge for stoker screw motor 400 V (3-phase) incl. change of rotation for firematic 120-201			
for new boilers	X000143-000		C2
for an existing boiler (retrofit)	X000143-000A		C2

firematic PELLET

Illustration: firematic PELLET

Biomass boiler for pellets and wood chips* (until M25, P16S)

	for pellets	for wood chips
firematic PELLET 120	35,9-120 kW	36,7-120 kW
firematic PELLET 149	35,9-149 kW	36,7-149 kW
firematic PELLET 151	35,9-151 kW	36,7-151 kW
firematic PELLET 180	35,9-180 kW	36,7-180 kW
firematic PELLET 199	35,9-199 kW	-
firematic PELLET 201	35,9-201 kW	-

*firematic 120 - 180 PELLET: for pellets and wood chips
firematic 199 - 201 PELLET: for pellets

Wood pellets according to
- EN ISO 17225-2: Property class A1, A2
- ENplus, DINplus or Swisspellet

Wood chips M25 (water content max. 25 %) according to
- EN ISO 17225-4: Property class A1 and particle size P16S

Boiler body with insulation	✔
Silencer set for boiler body	✔
Single stoker screw with geared drive	✔
Safety heat exchanger	✔
Speed controlled ID fan	✔
Step-/moving grate burning chamber	✔
Automatic cleaning of the grate elements	✔
Automatic cleaning of the burning ash via tipping grate	✔
Automatic heat exchanger cleaning	✔
Residual heat usage	✔
Splitted 2-zone combustion chamber	✔
Back-burn safety unit BFP-flap with self-closing fire protection flap	✔
Level monitored interim hopper	✔
Automatic ignition using hot air fans	✔
Automatic ash discharge of burning ash and fly ash into front ashbox	✔
Sensor set inclusive	✔

Controller T-Control
Microprocessor-driven operating unit with Touch-Display

Combustion control	✔
Buffer management module	✔
Control for back flow set (motor mixing valve and pump)	✔
Motor valve control for fastrun heating of the heating circuits during the buffer loading	✔
Lambda probe control (controls the combustion air and fuel input)	✔

i

With the extension modules it is possible to realise several possibilities (due to customers request and exisiting hydraulic system) and build up a complete heating control system.
In heat generators with T-Control following extension modules are possible: 4 internal modules und 30 external modules

HERZ firematic PELLET LEFT

	Art. No.	€	G
HERZ firematic PELLET 120	H031250-115		C3
HERZ firematic PELLET 149	H031495-115		C3
HERZ firematic PELLET 151	H031550-115		C3
HERZ firematic PELLET 180	H031850-115		C3
HERZ firematic PELLET 199	H031995-115		C3
HERZ firematic PELLET 201	H032500-115		C3

3

HERZ firematic PELLET RIGHT

	Art. No.	€	G
HERZ firematic PELLET 120	H031200-115		C3
HERZ firematic PELLET 149	H031490-115		C3
HERZ firematic PELLET 151	H031500-115		C3
HERZ firematic PELLET 180	H031800-115		C3
HERZ firematic PELLET 199	H031990-115		C3
HERZ firematic PELLET 201	H032000-115		C3

Accessories		Art. No.	€	G
	Lifting aid for firestar 18-40, pelletfire 20-40, pelletstar 10-60, pelletstar CONDENSATION 10-30, firematic 20-101 This makes it easier to lift the product off the pallet . (net, without discount)	K030201-625		-
	Thermal valve for safety heat exchanger Opening temperature: 95 °C, 3/4" internal thread	4080216-026		Z
	Pressure switch incl. cable (length 5 m) Range of adjustment 0-6 bar, output signal 4-20 mA	4050070-758		Z
	Boiler Safety Group KSG 1" until 50 kW, consisting of: – 1" connection, pressure relief valve 1/2" set pressure 3 bar – Automatic air vent, pressure gauge, stop valve, insulation cover The maximum working temperature is 110 °C. It is not suitable for steam!	4171200-100		Z

Splitted turbulators				Art. No.	€	Art. No.	€	G
	Splitted turbulators **for firematic & firematic PELLET**		Number of built-in sets	for an existing boiler (retrofit), price per built-in set		SURCHARGE for new boilers, price per built-in set		
	firematic 20,35	front	2	H030307-940	214,-	H030307-940A		Z
		rear	1	H030307-950	181,-	H030307-950A		Z
	firematic 45,60	front	2	H030507-940	290,-	H030507-940A		Z
		rear	1	H030507-950	229,-	H030507-950A		Z
	firematic 80-101	front	1	H030807-940	609,-	H030807-940A		Z
		rear	1	H030807-950	507,-	H030807-950A		Z
	firematic 120-201	front	1	H031757-940	1.360,-	H031757-940A		Z
		rear	1	H031757-950	1.055,-	H031757-950A		Z

Flue gas dust extractor				
	Integrated electrostatic filter for firematic including cleaning mechanism (for new boilers and retrofit)			
	for firematic 80-101	E035006-400		Z
	for firematic 120-201 & firematic PELLET 120-201	E035006-100		Z
	Assembly integrated electrostatic filter (net, without discount) firematic 80-201, firematic PELLET 120-201			
	in Austria	X000100-520A	*	-
	Commissioning integrated electrostatic filter (net, without discount) firematic 80-201, firematic PELLET 120-201			
	in Austria	X000100-530A	*	-

* Assembly and comissioning prices are available in the „HERZ Service Folder"

Accessories	Art. No.	€	G

Back flow sets

The calculations for the back flow sets refer to a temperature difference of ΔT= 15 K and a reserve pressure of 5 kPa for the flow-variable distance. The interpretation of the back flow set for the boiler has to be checked by the planner or installer and adjusted if necessary.

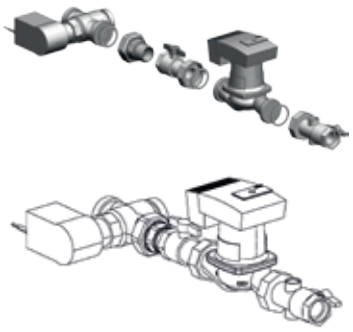

Back flow set (delivered unassembled) with 3-way-motor mixing valve with or without pump

≤kW	Pump	HE-pump**	kPa*	Valve	k_{VS}		
35	WILO Para 25/6 ▪	✔	11,8	1"	10	4290510-339	Z
35	Without pump	-	-	1"	10	4290510-253	Z
40	WILO Stratos Para 30/1-8	✔	54,9	5/4"	16	4290510-236	Z
45	WILO Stratos Para 30/1-8	✔	53	5/4"	16	4290510-236	Z
60	WILO Stratos Para 30/1-8	✔	24,5	5/4"	16	4290510-236	Z
80	WILO Stratos Para 30/1-8	✔	19,6	5/4"	16	4290510-236	Z
100	WILO Stratos Para 30/1-8	✔	12,8	5/4"	16	4290510-236	Z
100	WILO Stratos Para 30/1-12	✔	71,6	5/4"	16	4290510-343	Z
40 - 100	Without pump	-	-	5/4"	16	4290510-258	Z

▪ including grid connection adapter Molex to WS8 grid connector & WS8 mating connector

Back flow set (delivered unassembled) with 3-way-motor mixing valve with or without pump

≤kW	Pump	HE-pump**	kPa*	Valve	k_{VS}		
150	WILO Yonos MAXO plus 40/0,5-8	✔	14,7	6/4"	25	4290510-344	Z
150	WILO Yonos MAXO plus 40/0,5-12	✔	40,2	6/4"	25	4290510-342	Z
150	Without pump	✔	-	6/4"	25	4290510-220	Z

Back flow set (delivered unassembled) with or without pump

≤ kW	Pump	HE-pump**	kPa*	Valve (mm)	k_{VS} (m^3(h)	Brand	Type***	Art. No.	€	G
220	WILO Yonos MAXO plus 40/0,5-12	✔	24,5	DN 50	60	Danfoss HFE3 50	MI	4401700-000		Z
	without pump	-	-					4401700-220		Z
	WILO Yonos MAXO plus 40/0,5-12	✔	24,5	DN 50	40	Belimo H750R/LV230A-TPC	MV	4301700-000		Z
	without pump	-	-					4001700-220		Z

Back flow set (delivered unassembled) with or without double-pumps

≤ kW	Pump	HE-pump**	kPa*	Valve (mm)	k_{VS} (m^3(h)	Brand	Type***	Art. No.	€	G
220	WILO Stratos D 40/1-12	✔	25,5	DN 50	60	Danfoss HFE3 50	MI	4401700-050		Z
	without pump	-	-					4401700-200		Z
	WILO Stratos D 40/1-12	✔	25,5	DN 50	40	Belimo H750R/LV230A-TPC	MV	4301700-050		Z
	without pump	-	-					4001700-200		Z

Note: * residual pressure head in kPa ** **HE-Pump = high-efficiency pump** *** MI = mixer, MV = mixing valve

Accessories		Art. No.	€	G
Flue pipe				
	Draft regulator, diameter 150 mm with ex-flap	4100150-113		Z
	Draft regulator diameter 150 mm	4090150-071		Z
	Draft regulator, diameter 200 mm with ex-flap	4100200-038		Z
	Draft regulator diameter 200 mm	4090200-037		Z
	Draft regulator, diameter 250 mm with ex-flap	4100250-038		Z
	Wall socket for draft regulator 150	4130150-118		Z
	Wall socket for draft regulator 200	4130200-043		Z
	Flue pipe compensator - silencer			
	Ø 130 mm	X000401-130		Z
	Ø 150 mm	X000401-150		Z
	Ø 180 mm	X000401-180		Z
	Ø 200 mm	X000401-200		Z

SERVICES HERZ firematic & firematic PELLET				
	Assembly (boiler inclusive one discharge screw) – (without: external electrical cabling and transportation into the boiler room, hydraulic connection, flue pipe connection,...) (net, without discount)			
	firematic 20-60			
	in Austria	X000100-450A	*	-
	firematic 80-101			
	in Austria	X000100-430A	*	-
	firematic 120-201, firematic PELLET 120-201			
	in Austria	X000100-440A	*	-
	Commissioning and initial training by factory customer service (net, without discount)			
	firematic 20-101			
	in Austria	X000100-470A	*	-
	firematic 120-201, firematic PELLET 120-201			
	in Austria	X000100-300A	*	-
	Second visit for additional training, system check and readjustment (net, without discount)			
	in Austria	X000100-473A	*	-

* Assembly and comissioning prices are available in the „HERZ Service Folder"

Accessories		Art. No.	€	G
Hand filling- and suction hoppers for pellet boilers	LxWxH (mm)			
	Hand filling hopper FLEX for pelletstar 10-60, pelletfire 20-40, pelletstar CONDENSATION 10-101, firematic 20-201, firematic PELLET 120-201, firematic CONDENSATION 30-40			
	ca. 225 litres / 146 kg pellets	440x440x1520	P030303-016	Z
	ca. 740 litres / 480 kg pellets	600x1200x1520	P032673-000	Z
	Suction hopper FLEX inclusive external controller for firematic CONDENSATION 30-40, firematic 20-101			
	ca. 140 litres / 91 kg pellets	440x440x1675	P030303-017	Z
	Suction hopper FLEX inclusive external controller for pelletstar 10-60, pelletfire 20-40, pelletstar CONDENSATION 10-101, firematic 20-201, firematic PELLET 120-201, firematic CONDENSATION 30-40			
	ca. 350 litres / 225 kg pellets	600x1200x1725	P032673-011	Z
	Note: All wirings from the control box to the motors have to be done on the reference site.			
	Double-suction hopper FLEX inclusive external controller for pelletstar 10-60, pelletfire 20-40, pelletstar CONDENSATION 10-101, firematic 20-201, firematic PELLET 120-201, firematic CONDENSATION 30-40			
	ca. 385 litres / 250 kg pellets	600x1200x1725	P032673-006	Z
	Note: All wirings from the control box to the motors have to be done on the reference site.			
	Basic set "flexible screw" for hand filling and suction hopper FLEX includes: 2 m tube, 2,4 m screw, transfer head to BFP-flap incl. motor (pushing), hopper removal unit Info: Expendable till max. 5,5 metre!			
	≤ 60 kW pelletstar 10-60, pelletfire 20-40, pelletstar CONDENSATION 10-60, firematic 20-60, firematic CONDENSATION 30-40		P032673-200	Z
	≤ 201 kW: pelletstar 10-60, pelletfire 20-40, pelletstar CONDENSATION 10-101, firematic 20-201, firematic PELLET 120-201		P032673-202	Z
	The removal unit can be rotated 360° horizontally and vertically from 0-30°!			
	Transport tube or chute pipe (per metre)		5020760-000	L
	Flexible screw (per metre)		5016102-160	L
	Cyclone separator with dust collector for the installation in the return air lines of the pellet suction transfer system		P030309-100	L

3

Accessories	Art. No.	€	G
Accessories T-Control			
Extension modules for T-Control: With the extension modules it is possible to realise several possibilities (due to customers request and exisiting hydraulic system) and build up a complete heating control system. The following extension modules are possible for firematic, firematic PELLET & firematic CONDENSATION with T-Control: firematic 20-101: 2 internal and 30 external modules firematic 120-201: 4 internal and 30 external modules firematic PELLET: 4 internal and 30 external modules firematic CONDENSATION: 1 internal and 30 external modules nternal module: BUS-cable included (from factory) External modules: BUS-cable to heat generators an to connect the individual external modules is not included!			
	Extension module „heating circuit“ for T-Control (outside temperature regulation control incl. sensor set) INTERNAL 2 PT1000 sensor inputs: flow and back flow 1 room sensor input: for remote control FBR 1 3 relay outputs 230 VAC: pump and mixer	P020300-335	Z
	EXTERNAL (in wall-mounted box) 3 sensor inputs PT1000: flow and back flow, outside temperature 1 room sensor input: for remote control FBR 1 3 relay outputs 230 VAC: pump and mixer	P020300-450	Z
	Outside temperature sensor (PT1000) in a casing for controller T-Control for regulation due to the outside temperature (heating curve). For each external “heating circuit” module one outside temperature sensor is possible.	4057001-010	Z
	Extension module „solar circuit“ for T-Control (according to the scheme based on the HERZ guidelines, incl. sensor set) INTERNAL 4 PT 1000 sensor inputs: flow and back flow, tank 1 + 2 1 speed-controlled pump output 230 VAC (this output is not usable for HE-pumps) 2 relay outputs 230 VAC: pump or mixer / changeover valve	P020300-350	Z
	EXTERNAL (in wall-mounted box) 4 PT1000 sensor inputs: flow and back flow, tank 1 + 2 1 speed-controlled pump output 230 VAC (this output is not usable for HE-pumps) 3 relay outputs 230 VAC: pump or mixer / changeover valve	P020300-400	Z
	EXTERNAL (in wall-mounted box) 4 PT1000 sensor inputs: flow and back flow, tank 1 + 2 1 pulse width modulation output for speed controlled pump 3 relay outputs 230 VAC: pump or mixer / changeover valve	P020300-401	Z
	Extension module „buffer“ for T-Control (incl. sensor set) INTERNAL 3 PT1000 sensor inputs: buffer top middle, bottom 3 relay outputs 230 VAC: pump or mixer / changeover valve	P020300-340	Z
	EXTERNAL (in wall-mounted box) 4 PT1000 sensor inputs: buffer top middle, bottom, outside temperature 3 relay outputs 230 VAC: pump and mixer / changeover valve	P020300-500	Z
	Extension module „hot water tank“ for T-Control (incl. sensor set) INTERNAL 2 PT1000 sensor inputs: boiler and circulation 2 relay outputs 230 VAC: boiler pump and circulation pump	P020300-345	Z
	EXTERNAL (in wall-mounted box) 2 PT1000 sensor inputs: boiler and circulation 2 relay outputs 230 VAC: boiler pump and circulation pump	P020300-550	Z

Accessories		Art. No.	€	G
Accessories T-Control				
	Extension module „external requirement“ for T-Control (incl. sensor package) EXTERNAL (in wall-mounted box) Requirement via analog input 4-20 mA and digital input	P020300-660		Z
	INTERNAL extension module „net pump“ , „hydraulic compensator (shunt)“ or „zone valve“ for T-Control (incl. sensor set) „Net pump“ 1 PT1000 sensor input: net pump temperature 3 relay outputs 230 VAC: net pump and mixer „Hydraulic compensator (shunt)“ 1 PT1000 sensor input: hydraulic compensator temperature (shunt) 2 relay outputs 230 VAC: pump 1 / changeover valve + pump 2 „Zone valve control“ 1 relay output 230 VAC: zone valve	P020300-355		Z
	EXTERNAL extension module „net pump“ , „hydraulic compensator (shunt)“ or „zone valve“ for T-Control (in wall-mounted box, incl. sensor set) „Net pump“ 1 PT1000 sensor input: net pump temperature 3 relay outputs 230 VAC: net pump and mixer „Hydraulic compensator (shunt)“ 1 PT1000 sensor input: hydraulic compensator temperature (shunt) 2 relay outputs 230 VAC: pump 1 / changeover valve + pump 2 „Zone valve control“ 1 relay output 230 VAC: zone valve	P020300-650		Z
	EXTERNAL „pump extension module PWM or 0-10 Volt“ (in wall-mounted box) For speed controlling of the back flow pump for boilers with T-Control or for speed control of the pump of the additional boilers (schemes WE6 and WE8 regarding to regulation QM Heizwerke).	P020300-668		Z
	Cascade connection for T-Control (terminal & activation) per boiler Necessary for each boiler in the cascade ar e possible. (according to the scheme based on the HERZ guidelines)			
	for new boilers	7070000-300		Z
	for an existing boiler (retrofit)	7070000-250		Z
	Ethernet Switch (8 ports) for cascade connection of the boiler From a cascade of 3 boilers the switch is required. The ethernet - cabling (CAT 5 cable or higher, not included in delivery) has to be done on site ! (according to the scheme based on the HERZ guidelines)	7070000-301		Z

3

Accessories		Art. No.	€	G
Accessories T-Control				
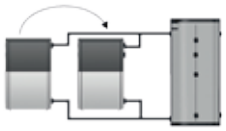	Extension module „automatic switch for second/additional boiler" for T-Control (according to the scheme based on the HERZ guidelines, incl. sensor set) EXTERNAL (in wall-mounted box) 2 PT1000 sensor inputs: exhaust temperature and boiler temperature of the additional boiler 1 relay output 230 VAC: boiler pump of the additional boiler 1 relay output potential free: for burner request additional boiler	P020300-600		Z
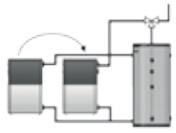	Extension module „automatic switch for additional boiler for buffer bypassing" for T-Control (according to the scheme based on the HERZ guidelines, incl. sensor set) EXTERNAL (in wall-mounted box) 3 PT1000 sensor inputs: exhaust temperature, boiler temperature of the additional boiler and hydraulic compensator temperature 2 relay outputs 230 VAC: boiler pump of the additional boiler, switching valve 1 relay output potential free: for burner request additional boiler	P020301-650		Z
	External module „external Info-Alarm" for T-Control (in wall-mounted box) 11 inputs: 8 digital (+24VDC), 3 analog (2x 4-20 mA, 1x 0-10 V) 8 outputs: 4x 230 VAC relay outputs, 4x 24 VDC	P020300-675		Z
	Flue gas temperature guard for locking the boiler (sends "Burner-Stop" if the second boiler produces heat)	5010130-288		Z
	Surcharge remote visualisation for T-Control via smartphone, PC or tablet The handling is the same as in the Touch-Control directly on the boiler. The processes and parameters can be read and modifi ed any time from anywhere. Note: The network connection has to be done by an external IT provider or IT company and a fixed IP address is required. A declaration of consent has to be signed by the user/ operator or owner of the heating system.	X000100-750		Z
	i - FBR digital room unit, visualise, operate and observe 3,5" TFT colour display, CAN-communication, internal temperature and humidity sensor Note: Compatible with boiler with T-Control 7" display			
	24 V (HZS 352)	5120300-327		G
	230 V (HZS 351)	5120300-326		G
	Remote control, FBR 1 including room sensor for outside temperature regulation control (for T-Control)	4056010-001		Z

Accessories		Art. No.	€	G
	Telephone breakdown reporting device (landline connection) which conveys pre-recorded text or spoken message	3301301-000		Z
	GSM phone fault reporting device (2 inputs, 2 outputs) Reports SMS message, including power supply 230 V and the module for uninterruptable power supply with battery, waterproof housing for outdoor installation IP68, up to 5 mobile phones can be saved (SIM card not included in the price) Necessary SIM-card size: Nano-SIM	3301302-001		Z
	OPTIONAL: if mobile reception is bad, Antenna for GSM fault reporting device	3301302-005		Z
	Commissioning for telephone breakdown (landline connection or mobile phone) (only applies in combination with system commissioning) (net, without discount)			
	in Austria	X000100-900A	*	-
	Commissioning charge per extension module T-Control (heating circuit, hot water tank, buffer, solar, external requirement, netpump) (only applies in combination with system commissioning) (net, without discount)			
	in Austria	X000132-000A	*	-

* Assembly and comissioning prices are available in the „HERZ Service Folder“

3

Accessories		Art. No.	€	G
Central ash discharge via flexible screw just applicable with pellets as fuel 				
	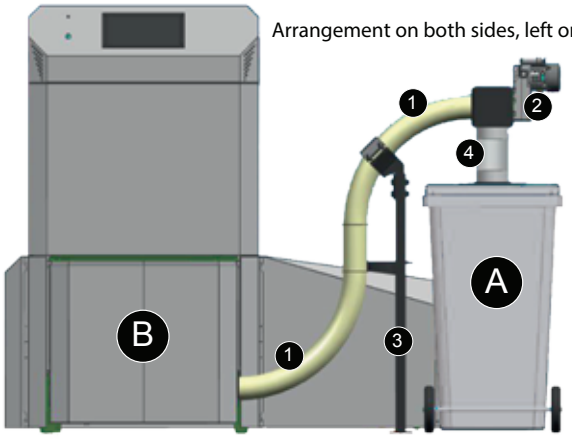 Arrangement on both sides, left or right, possible Basic set central ash discharge for firematic: – (B) Ash box of the boiler – (1) stainless steel pipe with 2 bows – (1) Flexible screw – (2) Discharge motor – (3) Pillar – (4) Transfer head for ash hopper and dropping pipe 0,5 m			
	firematic 20-35 (L* = 2642 mm)	H030307-300		Z
	firematic 45-60 (L* = 2642 mm)	H030507-300		Z
	firematic 80-101 (L* = 2776 mm)	H030807-300		Z
	firematic 120-201, firematic PELLET 120-201 (L* = 2912 mm)	H031757-300		Z
	ATTENTION: Delivery without ash hopper (A)! L*= Scr ew length NOTE: When buying a firematic with a central ash discharge, special ash hoppers (B) are supplied instead.			
	Ash hopper 240 litres galvanised (with opening on the top) (A)	H176007-205		Z
	Ash hopper 660 litres galvanised (with opening on the top)** (A)	5012202-150		Z
	Ash hopper 1100 litres galvanised (with opening on the top)** (A)	H178007-200		Z

**ATTENTION: With this version, the vertical screw has to be extended by 0,5 m!

Accessories	Art. No.	€	G

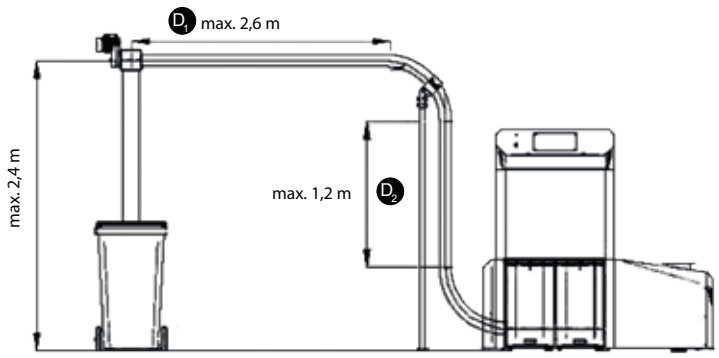

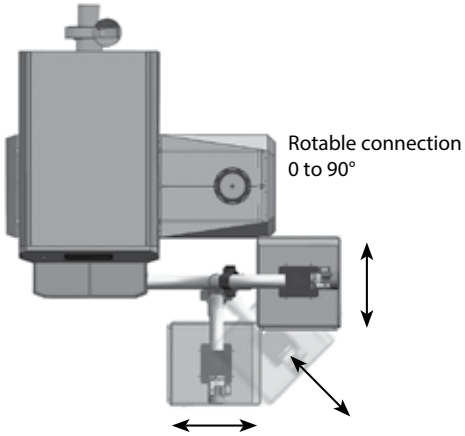

3

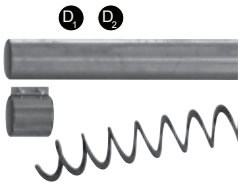	1 metre screw extension for central ash discharge firematic consisting of stainless steel pipe, flexible screw and connenction clamp (horizontal or vertical usable)	H030507-301	Z
	Additional holder floor / wall / ceiling (Note: 1 holder is already included in the basic set) Note: From a horizontal screw length (D1) of 1 metre, an additional holder is recommended.	H030507-305	Z
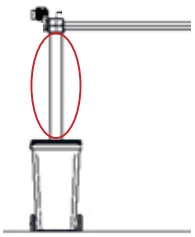	Extension set "Dropping tube" per metre for central ash discharge firematic includes: dropping tube, clamp	H030507-357	Z

SERVICES	**ash discharge system with flexible screw**			
	Assembly ash discharge system flexible screw firematic 20-201 & firematic PELLET 120-201 (net, without discount) in Austria	X000100-380A	*	-

* Assembly and comissioning prices are available in the „HERZ Service Folder"

Accessories	Art. No.	€	G

Central ash discharge
via rigid screw for firematic 20-201
(applicable for wood chips and pellets as fuel)

Basic set "direct drop"

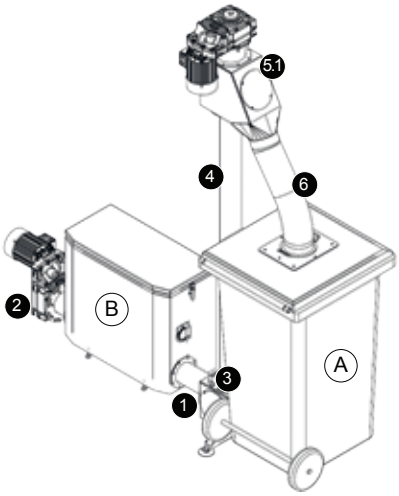

Basic set "transfer system"

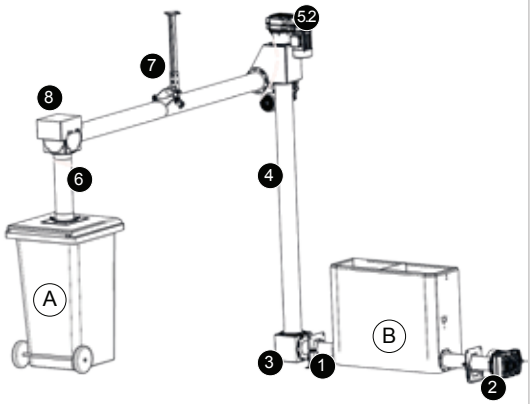

Basic set "direct drop"
(1~ 230V or 3~ 400V):
- (B) Ash hopper at the boiler + light barrier
- (1) Box screw ø85 mm on shaft
- (2) Discharge motor 0,37 kW
- (3) Transfer hopper
- (4) Vertical screw 1.5 m, ø115 mm without shaft
- (5.1) Dropping head + motor
- (6) Dropping pipe 1 m

Min. room height for the basic set: 2.340 mm
(shorter variants possible)

Basic set „transfer system“ (3~ 400V):
- (B) Ash hopper at the boiler + light barrier
- (1) Box screw ø85 mm on shaft
- (2) Discharge motor 0,37 kW
- (3) Transfer hopper
- (4) Vertical screw 2 m, ø115 mm without shaft
- (5.2) Transfer head + motor
- (7) Horizontal screw 1 m, ø115 mm on shaft + holder
- (8) Transfer hopper
- (6) Dropping pipe 1 m

Min. room height for the basic set: 2.840 mm
(shorter variants possible)

		System "direct drop“		System "transfer"	
		1~ 230 V	3~ 400 V	3~ 400 V	
firematic 20-35	Art. No. €	H030307-350	H030307-355	H030307-380	Z
firematic 45-60	Art. No. €	H030507-350	H030507-355	H030507-380	Z
firematic 80-101	Art. No. €	H030807-350	H030807-355	H030807-380	Z
firematic 120-201 & firematic PELLET 120-201	Art. No. €	H031757-350	H031757-355	H031757-380	Z

ATTENTION: Delivery without ash hopper (A)!
ATTENTION: The insulation including weather protection in the outdoor area has to be done on site!

Ash hopper 240 litres galvanised (with opening on the top) (A) — H176007-205 — Z

Ash hopper 660 litres galvanised (with opening on the top)** (A) — 5012202-150 — Z

Ash hopper 1100 litres galvanised (with opening on the top)** (A) — H178007-200 — Z

**ATTENTION: With this version, the vertical screw has to be extended by 0,5 m!

Accessories		Art. No.	€	G
	Extension set „additional screw“ (3~ 400 V) includes: motor, transfer hopper, horizontal screw 1 m (ø115 mm on shaft) and steel pipe + additional holder Maximum 2 extensions possible (to total 5 screws)	H030507-354		Z
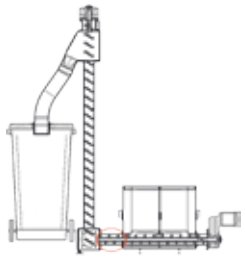	Extension set “screw ash box” per metre for central ash discharge firematic includes: screw ø85 mm on shaft, steel pipe Maximum extension length: 2 m	H030507-353		Z
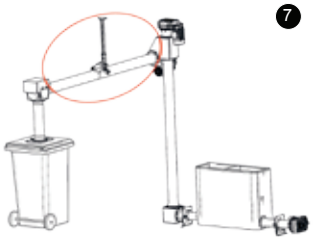	Extension set “horizontal screw” per metre for central ash discharge firematic includes: screw ø115 mm on shaft, steel pipe, flange Per 2 m one additional holder is necessary. Maximum extension length: 8 m (max. total length 9 m)	H030507-352		Z
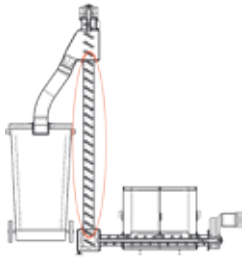	Extension set “vertical screw” per metre for central ash discharge firematic includes: screw ø115 mm without shaft, steel pipe, flange Maximum total height: 4 m	H030507-351		Z
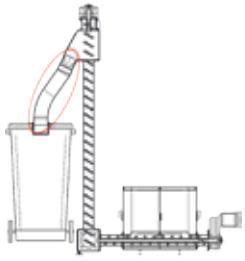	Extension set “dropping tube” per metre for central ash discharge firematic includes: dropping tube, clamp	H030507-357		Z
	Control box de-ashing (3~ 400 V) 2 motor outputs 3 motor outputs 4 motor outputs 5 motor outputs	 X000105-320 X000105-330 X000105-340 X000105-350		 Z Z Z Z
	Additional holder floor / wall / ceiling (Note: 1 holder is already included in the basic set)	H030507-305		Z

3

Accessories		Art. No.	€	G
SERVICES ash discharge system with rigid screw				
	Assembly ash discharge system rigid screw firematic 20-501 & firematic PELLET 120-201 with 2 motors (net, without discount)			
	in Austria	X000100-381A	*	-
	Assembly per additional screw to ash discharge system rigid for firematic 20-501 & firematic PELLET 120-201 (net, without discount)			
	in Austria	X000100-382A	*	-

* Assembly and comissioning prices are available in the „HERZ Service Folder“

NOTES

3

Flexible screw systems for pellets

Highlights

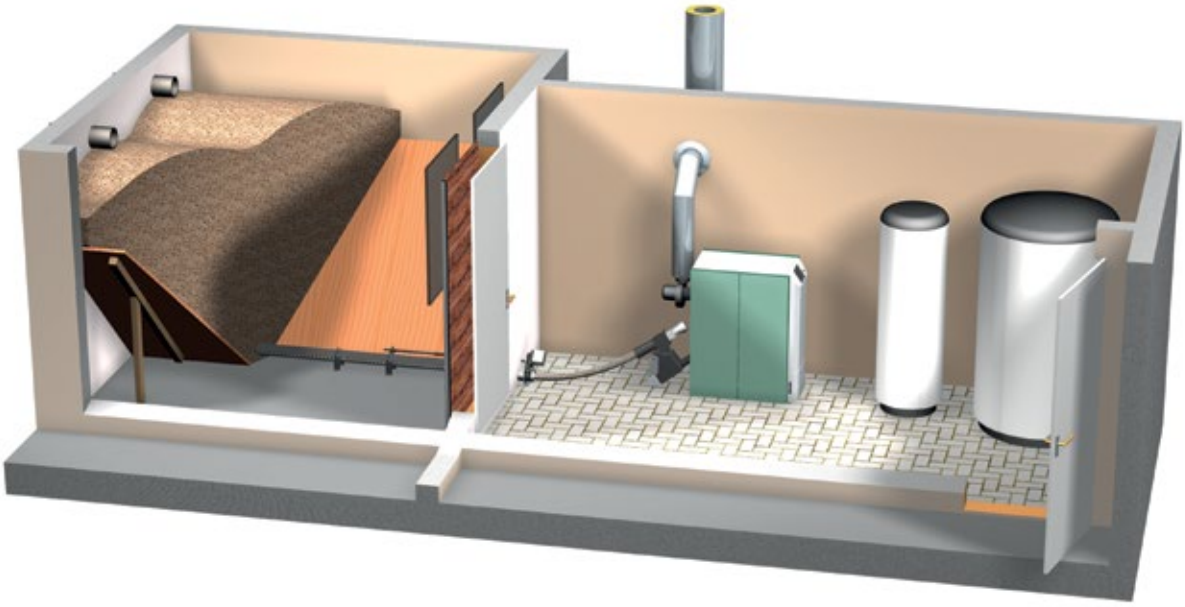

- Inexpensive purchase
- Extremely quiet operation
- Gentle transport of the pellets
- Flexible screw bending radius: min. 1.25 metres
- Length of the screw: max. 9.5 metres
  (for longer distances a solution with a transfer system to a second flexible screw is possible)
- Max. bulk height 3m

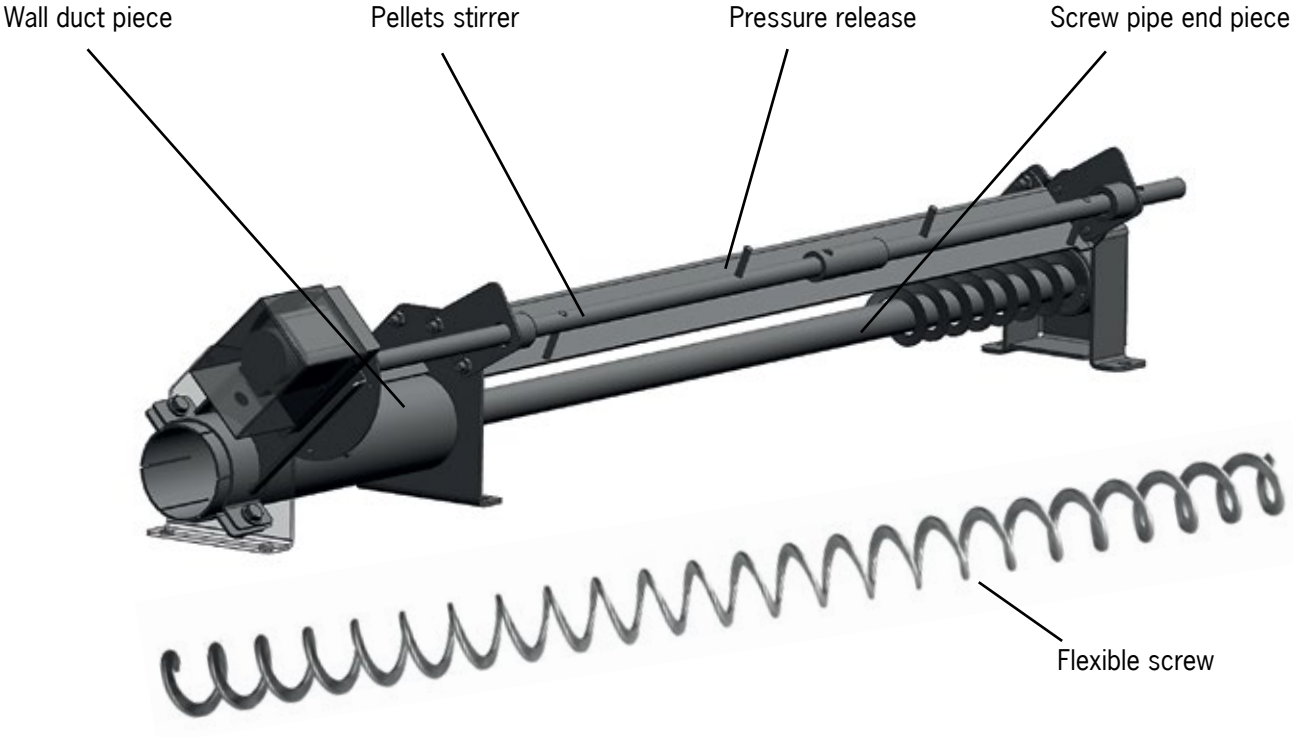

Flexible screw systems for pellets

Accessories		Art. No.	€	G
PELLETS **pelletfire 20-40** pelletstar 10-60 pelletstar CONDENSATION 10-101 **frematic CONDENSATION 30-40** **frematic 20-201** **frematic PELLET 120-201** Flexible pellets screw discharge systems (1~, 230 Volt) for wood pellets (Ø 6mm) according EN ISO 17225-2: Property class A1 ENplus, DINplus or Swisspellet	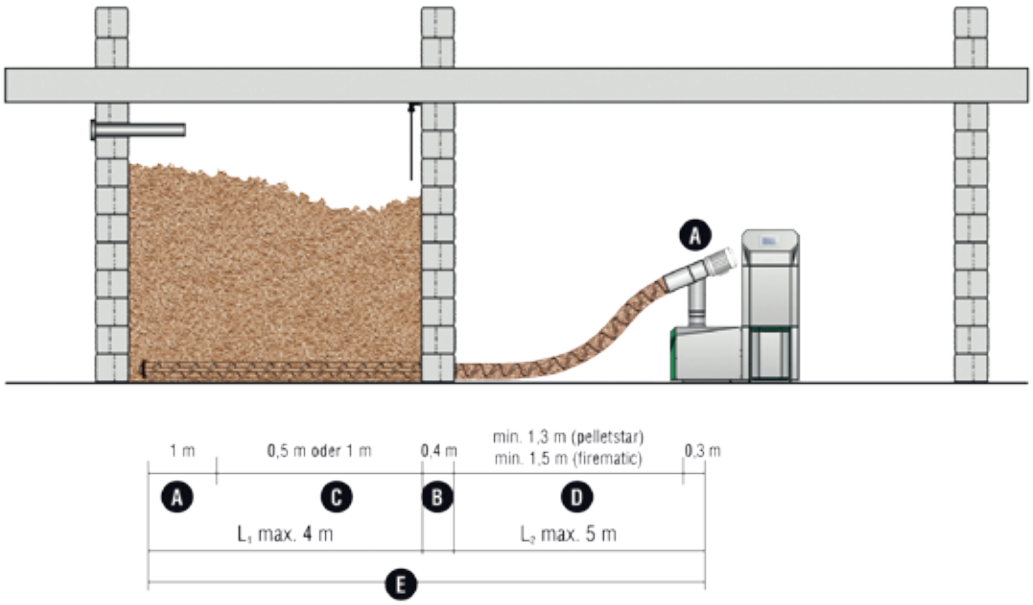			

	Basic set screw discharge (A)+(B) consisting of: – Transfer head BFP-flap with motor – Screw end piece (screw pipe with pressure release 1 m) – Wall duct piece 0,4 m, connection clamps for transport tube – Pellets stirrer ≤ 60 kW: pelletstar 10-60, pelletstar CONDENSATION 10-60, pelletfire 20-40, frematic 20-60, frematic CONDENSATION 30-40	A031000-000	L
	80-201 kW: pelletstar CONDENSATION 80-101, frematic 80-201, frematic PELLET 120-201	A031000-055	L
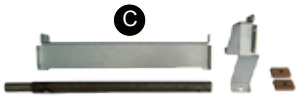	Screw pipe with pressure release – extension piece, 0,5 m (C)	A031050-000	L
	Screw pipe with pressure release 1 m extension piece (C)	A031100-000	L
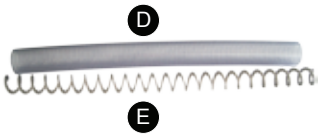	Set flexible transport tube (D) + flexible screw (E) — E = (A)+(B)+(C)+(D) + 0,3 m		
	Set / Transport tube length (D) / Screw length (E)		
	2 / 2 m / 5,5 m	P400400-200	L
	5 / 2 m / 6,7 m	P400400-300	L
	1 / 4 m / 7,5 m	P400400-400	L
	4 / 6 m / 9,5 m	P400400-600	L
	ATTENTION: In the case that a frematic boiler uses a flexible screw system the usage of a time relay and the belonging plug-in socket is necessary.		
	Time relay TI72 230V for controlling of the pellet stirrer of the screw system at the frematic boilers up to 201 kW	5020600-199	Z
	Plug-in socket ZKM 118 f. time relay TI72	5020110-203	Z

4

Flexible screw systems for pellets

Accessories	Art. No.	€	G

PELLETS

pelletfire 20-40
pelletstar 10-60
pelletstar CONDENSATION 10-101
firematic CONDENSATION 30-40
firematic 20-201
firematic PELLET 120-201

Flexible pellets screw discharge systems
Chute pipe
(1~, 230 Volt)

for wood pellets (Ø 6mm) according EN ISO 17225-2: Property class A1 ENplus, DINplus or Swisspellet

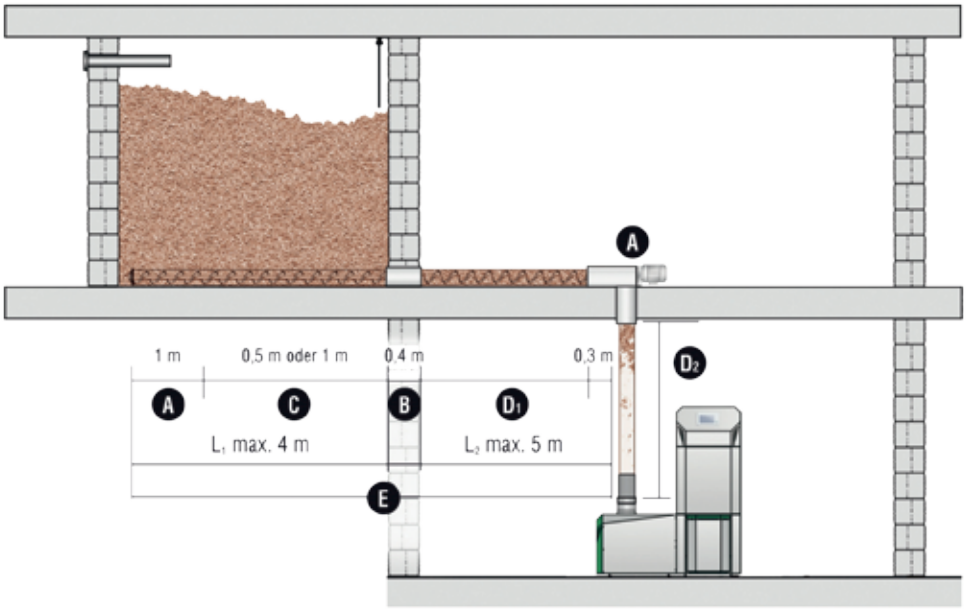

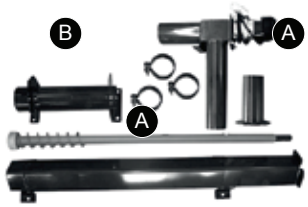

Basic set chute pipe (A)+(B) consisting of:
- Transfer head incl. adapter to BFP-flap, with motor and chute pipe
- Screw end piece (screw pipe with pressure release 1 m)
- Wall duct 0,4 m
- Adapter for transport tube to BFP-flap, connection clamps for transport tube
- Pellets stirrer

≤ 60 kW: pelletstar 10-60, pelletstar CONDENSATION 10-60, pelletfire 20-40, firematic 20-60, firematic CONDENSATION 30-40	A031000-020	L
80-201 kW: pelletstar CONDENSATION 80-101, firematic 80-201, firematic PELLET 120-201	A031000-045	L

Screw pipe with pressure release – extension piece, 0,5 m (C)	A031050-000	L
Screw pipe with pressure release 1 m extension piece (C)	A031100-000	L

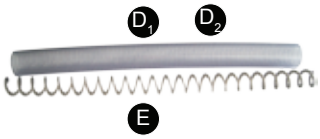

Set flexible transport tube (D) + flexible screw (E) E = (A)+(B)+(C)+(D1) + 0,3 m

Set	Transport tube length (D)	Screw length (E)		
2	2 m	5,5 m	P400400-200	L
5	2 m	6,7 m	P400400-300	L
1	4 m	7,5 m	P400400-400	L
4	6 m	9,5 m	P400400-600	L
Flexible transport tube (D2) (per metre)			5020760-000	L

ATTENTION: In the case that a firematic boiler uses a flexible screw system the usage of a time relay and the belonging plug-in socket is necessary.

Time relay TI72 230V for controlling of the pellet stirrer of the screw system at the firematic boilers up to 201 kW	5020600-199	Z
Plug-in socket ZKM 118 for time relay TI72	5020110-203	Z

Assembly per additional flexible screw (valid in combination with boiler assembly)
(without external electrical cabling and transportation into the boiler room), (net, without discount)

in Austria	X000100-463A	*	-

* Assembly and comissioning prices are available in the „HERZ Service Folder"

Flexible screw systems for pellets

Accessories		Art. No.	€	G
PELLETS **pelletfire 20-40** pelletstar 10-60 pelletstar CONDENSATION 10-101 **firematic CONDENSATION 30-40** **firematic 20-201** **firematic PELLET 120-201** Flexible pellet screw discharge system Chute pipe system and adapter (1~, 230 Volt) for wood pellets (Ø 6mm) according EN ISO 17225-2: Property class A1 ENplus, DINplus or Swisspellet	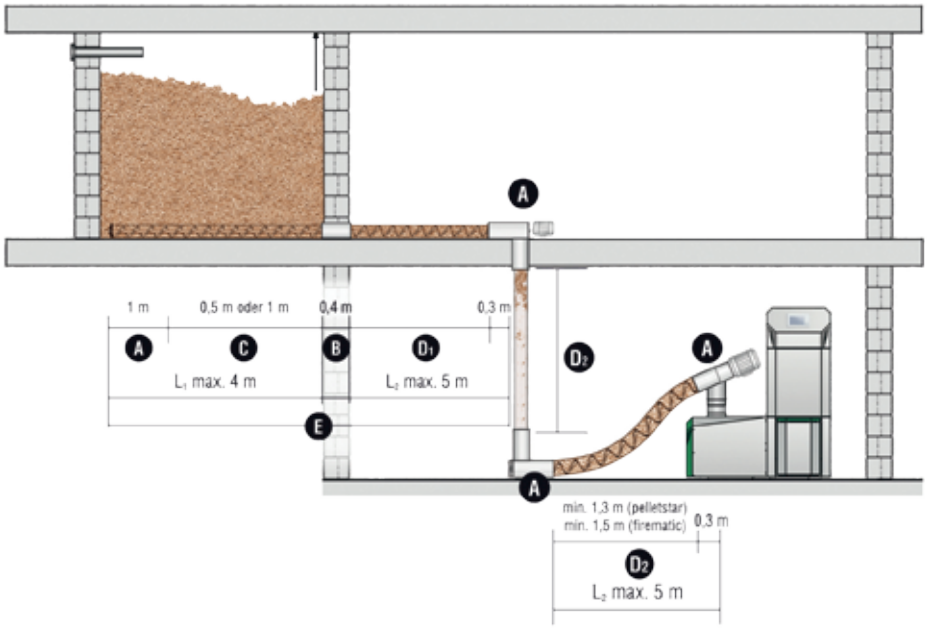			

4

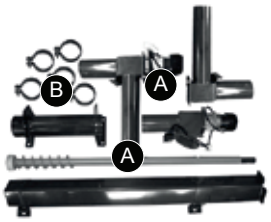	Basic set chute pipe with transfer hopper (A)+(B) consisting of: – 2 transfer heads incl. adapter to BFP-flap, with motor and chute pipe – Screw end piece (screw pipe with pressure release 1 m) – Wall duct 0,4 m – Adapter for transport tube to BFP-flap, connection clamps for transport tube – Pellets stirrer			
	≤ 60 kW: pelletstar 10-60, pelletstar CONDENSATION 10-60, pelletfire 20-40, firematic 20-60, firematic CONDENSATION 30-40	A031000-097		L
	80-201 kW: pelletstar CONDENSATION 80-101, firematic 80-201, firematic PELLET 120-201	A031000-099		L
	Screw pipe with pressure release – extension piece, 0,5 m (C)	A031050-000		L
	Screw pipe with pressure release 1 m extension piece (C)	A031100-000		L
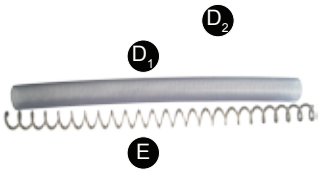	Set flexible transport tube (D) + flexible screw (E)	E = (A)+(B)+(C)+(D1) + 0,3 m		
	Set / Transport tube length (D) / Screw length (E)			
	2 / 2 m / 5,5 m	P400400-200		L
	5 / 2 m / 6,7 m	P400400-300		L
	1 / 4 m / 7,5 m	P400400-400		L
	4 / 6 m / 9,5 m	P400400-600		L
	Flexible transport tube (D2) (per metre)	5020760-000		L
	ATTENTION: In the case that a firematic boiler uses a flexible screw system the usage of a time relay and the belonging plug-in socket is necessary.			
	Time relay TI72 230V for controlling of the pellet stirrer of the screw system at the firematic boilers up to 201 kW	5020600-199		Z
	Plug-in socket ZKM 118 for time relay TI72	5020110-203		Z
	Assembly per additional flexible screw (valid in combination with boiler assembly) (without external electrical cabling and transportation into the boiler room), (net, without discount)			
	in Austria	X000100-463A	*	-

* Assembly and comissioning prices are available in the „HERZ Service Folder"

Flexible screw systems for pellets

Accessories		Art. No.	€	G
PELLETS **pelletfire 20-40** pelletstar 10-60 pelletstar CONDENSATION 10-101 **frematic CONDENSATION 30-40** **frematic 20-201** **frematic PELLET 120-201** Flexible pellet screw discharge system Transfer system (1~, 230 Volt) for wood pellets (Ø 6mm) according EN ISO 17225-2: Property class A1 ENplus, DINplus or Swisspellet	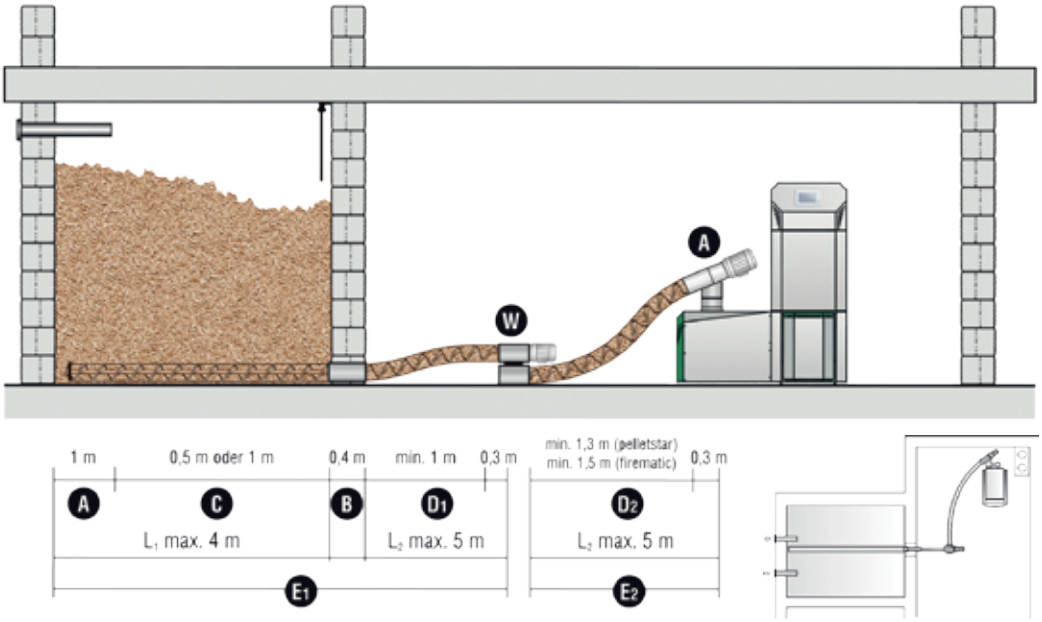			
	Basic set pellet screw system - transfer hopper (A)+(B)+(W) consisting of: – Transfer head incl. adapter to BFP-flap, with motor – Transfer hopper with motor and clock relay – Screw end piece (screw pipe with pressure release 1 m) – Wall duct piece 0,4 m, connection clamps for transport tube – Pellets stirrer ≤ 60 kW: pelletstar 10-60, pelletstar CONDENSATION 10-60, pelletfire 20-40, frematic 20-60, frematic CONDENSATION 30-40	A031000-060		L
	80-201 kW: pelletstar CONDENSATION 80-101, frematic 80-201, frematic PELLET 120-201	A031000-075		L
	Screw pipe with pressure release – extension piece, 0,5 m (C)	A031050-000		L
	Screw pipe with pressure release 1 m extension piece (C)	A031100-000		L
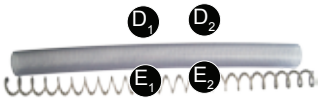	Set flexible transport tube (D) + flexible screw (E) — E1 = (A)+(B)+(C)+(D1) + 0,3 m / E2 = (D2) + 0,3 m			
	Set — Transport tube length (D) — Screw length (E)			
	2 — 2 m — 5,5 m	P400400-200		L
	5 — 2 m — 6,7 m	P400400-300		L
	3 — 5 m — 5,5 m	P400400-500		L
	1 — 4 m — 7,5 m	P400400-400		L
	4 — 6 m — 9,5 m	P400400-600		L
	ATTENTION: In the case that a frematic boiler uses a flexible screw system the usage of a time relay and the belonging plug-in socket is necessary.			
	Time relay TI72 230V for controlling of the pellet stirrer of the screw system at the frematic boilers up to 201 kW	5020600-199		Z
	Plug-in socket ZKM 118 for time relay TI72	5020110-203		Z
	Assembly per additional flexible screw (valid in combination with boiler assembly) (without external electrical cabling and transportation into the boiler room), (net, without discount)			
	in Austria	X000100-463A	*	-

* Assembly and comissioning prices are available in the „HERZ Service Folder"

Flexible screw systems for pellets

Accessories	Art. No.	€	G

PELLETS

pelletfire 20-40
pelletstar 10-60
pelletstar CONDENSATION 10-101
firematic CONDENSATION 30-40
firematic 20-201
firematic PELLET 120-201

Flexible pellet
screw discharge system
Transfer hopper FIX
(1~, 230 Volt)

for wood pellets (Ø 6mm) according
EN ISO 17225-2: Property class A1
ENplus, DINplus or Swisspellet

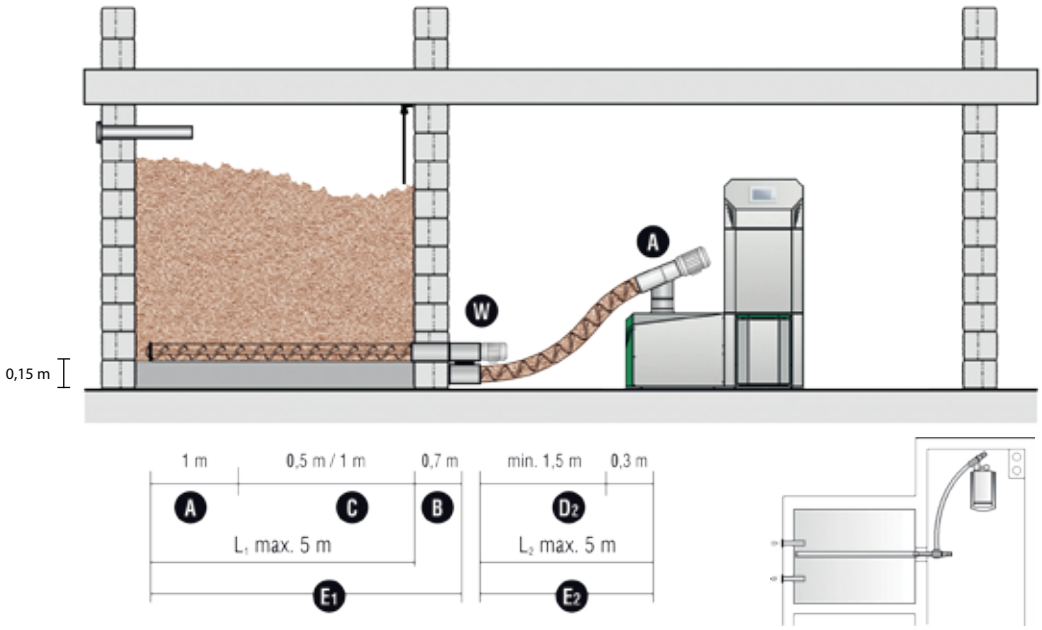

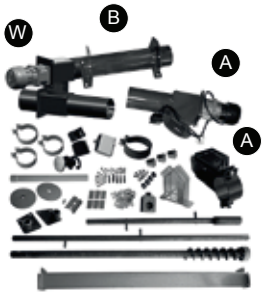

Basic set pellet screw system - transfer hopper FIX (A)+(B) consisting of:
- Transfer head incl. adapter to BFP-flap, with motor
- Wall duct piece 0,4 m including transfer hopper with motor and time relay
- Screw end piece (screw pipe with pressure release 1 m), connection clamps for transport tube
- Pellets stirrer

≤ 60 kW: pelletstar 10-60, pelletstar CONDENSATION 10-60, pelletfire 20-40, firematic 20-60, firematic CONDENSATION 30-40	A031000-080	L
80-201 kW: pelletstar CONDENSATION 80-101, firematic 80-201, firematic PELLET 120-201	A031000-095	L

Screw pipe with pressure release – extension piece, 0,5 m (C)	A031050-000	L
Screw pipe with pressure release 1 m extension piece (C)	A031100-000	L

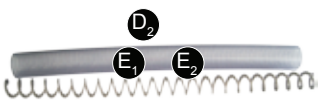

Set flexible transport tube (D) + flexible screw (E) E1 = (A)+(B)+(C) + 0,7 m / E2 = (D2) + 0,3 m

Set	Transport tube length (D)	Screw length (E)		
2	2 m	5,5 m	P400400-200	L
5	2 m	6,7 m	P400400-300	L
1	4 m	7,5 m	P400400-400	L
4	6 m	9,5 m	P400400-600	L
Flexible transport tube (D2) (per metre)			5020760-000	L

ATTENTION: In the case that a firematic boiler uses a flexible screw system the usage of a time relay and the belonging plug-in socket is necessary.

Time relay TI72 230V for controlling of the pellet stirrer of the screw system at the firematic boilers up to 201 kW	5020600-199	Z
Plug-in socket ZKM 118 for time relay TI72	5020110-203	Z

Assembly per additional flexible screw (valid in combination with boiler assembly)
(without external electrical cabling and transportation into the boiler room), (net, without discount)

in Austria	X000100-463A	*	-

* Assembly and comissioning prices are available in the „HERZ Service Folder"

Additional storage room screw

Accessories	Art. No.	€	G

PELLETS

pelletfire 20-40
pelletstar 10-60
pelletstar CONDENSATION 10-101
firematic CONDENSATION 30-40
firematic 20-201
firematic PELLET 120-201

Additional storage room screw for
flexible pellet
screw discharge system
Transfer hopper FIX
(1~, 230 Volt)

for wood pellets (Ø 6mm) according
EN ISO 17225-2: Property class A1
ENplus, DINplus or Swisspellet

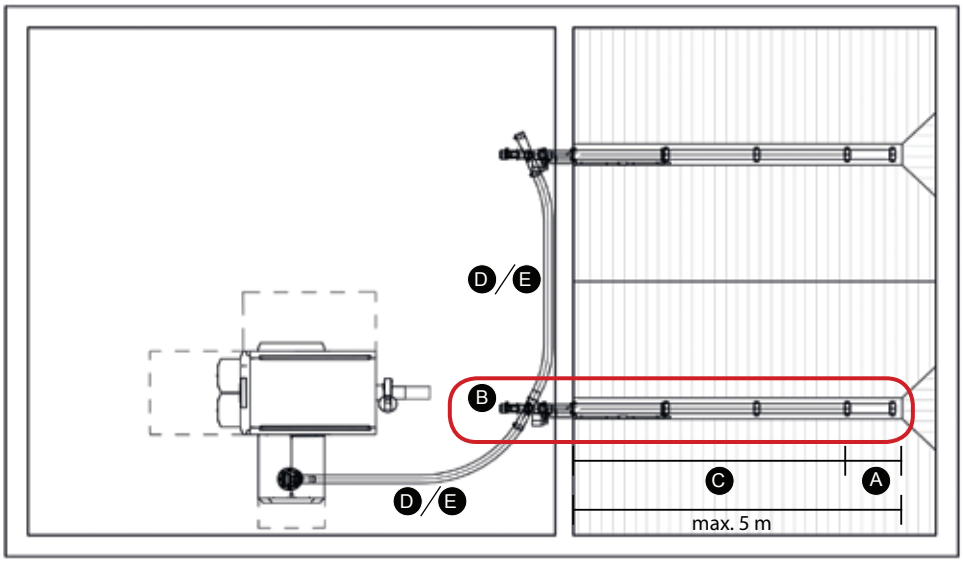

Basic set additional storage room screw consisting of:
- Wall duct piece 0,4 m including transfer hopper with motor and time relay
- Screw end piece (screw pipe with pressure release 1 m), connection clamps for transport tube
- Pellets stirrer

≤ 60 kW: pelletstar 10-60, pelletstar CONDENSATION 10-60, pelletfire 20-40, firematic 20-60, firematic CONDENSATION 30-40	A031000-280	L
80-201 kW: pelletstar CONDENSATION 80-101, firematic 80-201, firematic PELLET 120-201	A031000-295	L

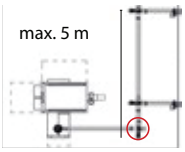

Transfer head system incl. motor

pelletstar 10-60, pelletstar CONDENSATION 10–60, pelletfire 20-40, firematic 20-60, firematic CONDENSATION 30-40	A031000-165	L
firematic 80-201, firematic PELLET 120-201, pelletstar CONDENSATION 80-101	A031000-185	L

Note: This system has to be used if the minimum radius of the collecting scr ew can not be met or the screw is longer than 5 metres.

Screw pipe with pressure release – extension piece, 0,5 m (C)	A031050-000	L
Screw pipe with pressure release 1 m extension piece (C)	A031100-000	L

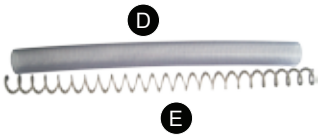

Set flexible transport tube (D) + flexible screw (E) E1 = (A)+(B)+(C) + 0,7 m / E2 = (D2) + 0,3 m

Set	Transport tube length (D)	Screw length (E)		
2	2 m	5,5 m	P400400-200	L
5	2 m	6,7 m	P400400-300	L
1	4 m	7,5 m	P400400-400	L
4	6 m	9,5 m	P400400-600	L

Control cabinet additional storage room screw for controlling several motors.
Including automatic (time-controlled) and manual switching of storage room screws.

3 motors 230 V	X100110-203	L
4 motors 230 V	X100110-204	L

Assembly per additional flexible screw (valid in combination with boiler assembly)
(without external electrical cabling and transportation into the boiler room), (net, without discount)

in Austria	X000100-463A	*	-

* Assembly and comissioning prices are available in the „HERZ Service Folder"

Variants flexible pellets screw systems

Accessories

PELLETS

pelletfire 20-40
pelletstar 10-60
pelletstar CONDENSATION 10-101
firematic CONDENSATION 30-40
firematic 20-201
firematic PELLET 120-201

2 storage room screws with collecting screw and transfer system
(1~, 230 Volt)

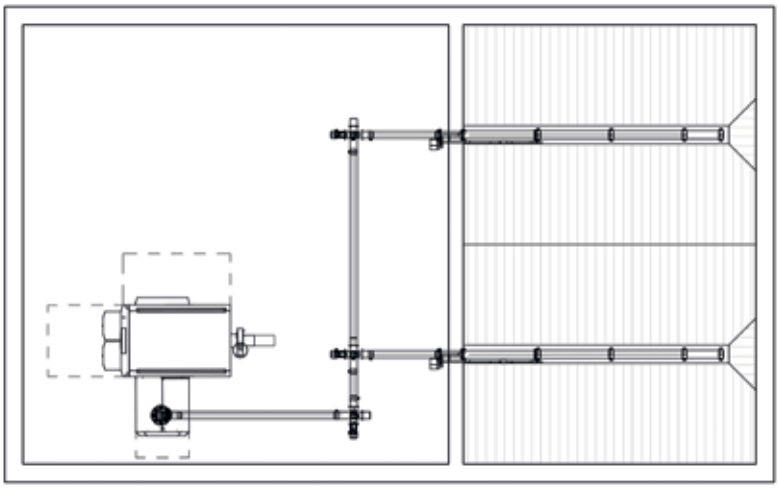

PELLETS

pelletfire 20-40
pelletstar 10-60
pelletstar CONDENSATION 10-101
firematic CONDENSATION 30-40
firematic 20-201
firematic PELLET 120-201

2 storage room screws with 2 collecting screws, transfer system and double drop head*
(1~, 230 Volt)

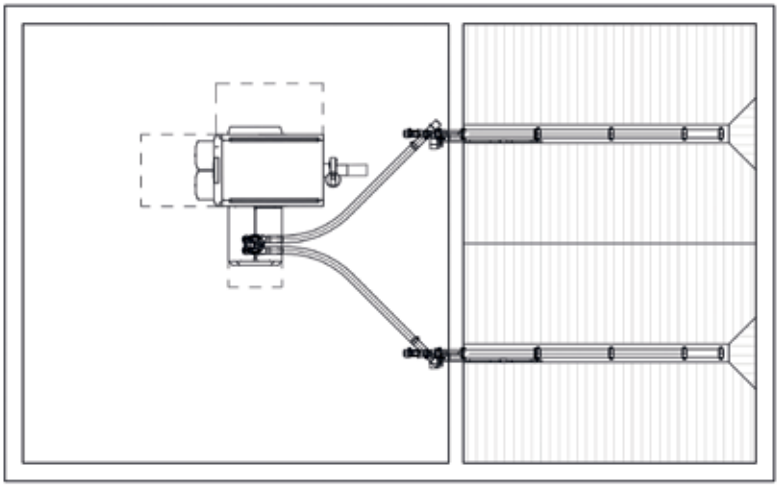

PELLETS

pelletfire 20-40
pelletstar 10-60
pelletstar CONDENSATION 10-101
firematic CONDENSATION 30-40
firematic 20-201
firematic PELLET 120-201

4 storage room screws with 2 collecting screws, transfer system and double drop head*
(1~, 230 Volt)

*double drop head

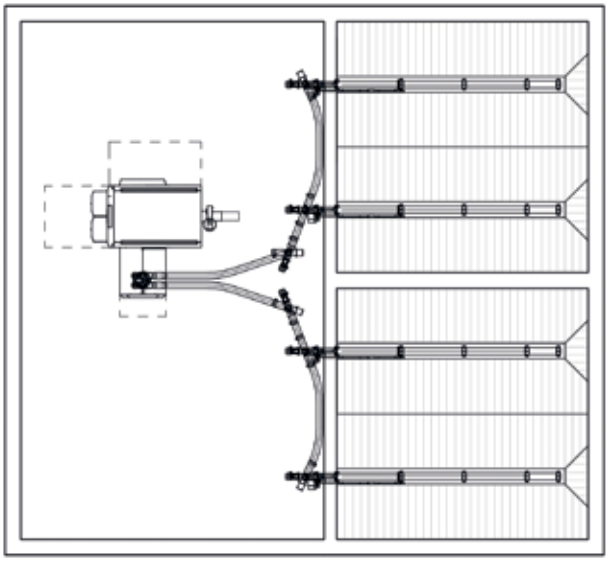

Prices on request (project work)

4

Suction systems for pellets

Accessories	Art. No.	€	G

PELLETS

pelletfire 20-40
pelletstar 10-60
pelletstar CONDENSATION 10-101
firematic CONDENSATION 30-40
firematic 20-201
firematic PELLET 120-201

Modular pellets screw discharge systems
Suction system
(1~, 230 Volt)

for wood pellets (Ø 6mm) according EN ISO 17225-2: Property class A1 ENplus, DINplus or Swisspellet

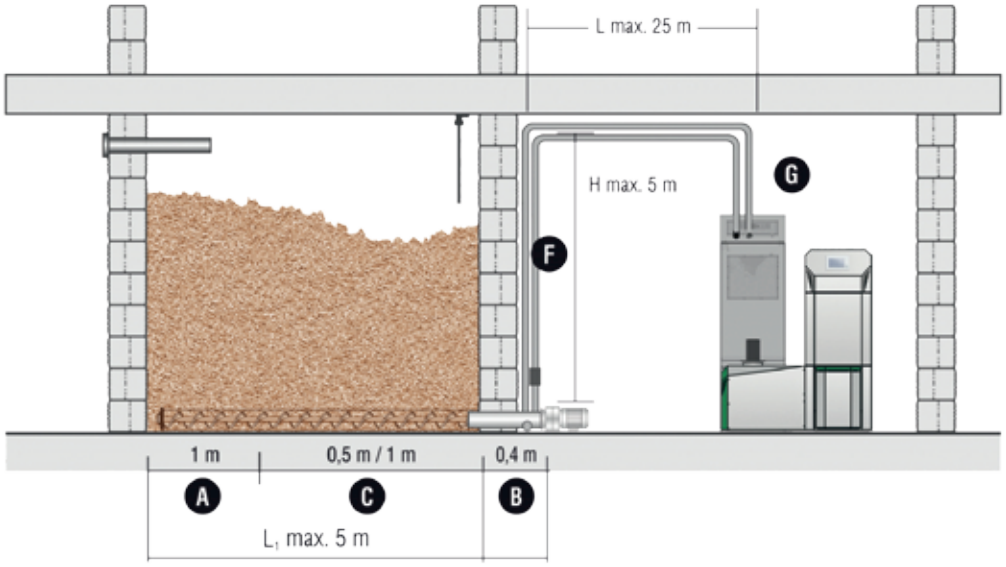

ATTENTION: At the double suction hopper it's necessary to use 2 identical dischar ges (for instance 2 agitators, 2 screws, 2 4-point or 8-point-suction-systems).

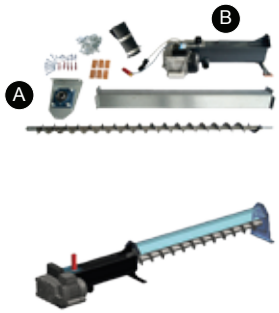

Basic set suction discharge system (A)+(B) consisting of:
- Suction head with motor inclusive wall duct piece 0,4 m
- Screw end piece (screw with pressure release 1 m)
- Overfill protector
- Fire protection clamp

pelletstar 10-60, pelletstar CONDENSATION 10-101, pelletfire 20-40, firematic 20-101, firematic CONDENSATION 30-40	A441000-000	L
firematic 120-201, firematic PELLET 120-201 (*order 2x)	A441000-000 (*)	L

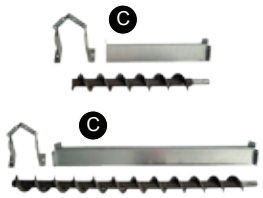

Screw with pressure release – extension piece, 0,5 m (C)	A441050-000	L
Schnecke mit Druckentlastung – Erweiterungsstück 1 m (C)	A441100-000	L

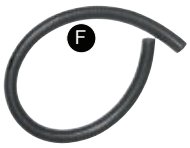

Set suction tube (F) + reverse air tube (G) incl. fixing material (per metre one wall clamp)

Set	Suction tube (F) + reverse air tube (G)		Boilers ≤ 60 kW	Boilers ≥ 80 kW (highly abrasion resistant)	
1	each 10 m	€ Art. No.	P400400-100	P400401-100	L
2	each 15 m	€ Art. No.	P400400-150	P400401-150	L
3	each 30 m	€ Art. No.	P400400-250	P400401-250	L

Suction systems for pellets

Accessories	Art. No.	€	G

PELLETS

pelletfire 20-40
pelletstar 10-60
pelletstar CONDENSATION 10-101
firematic CONDENSATION 30-40
firematic 20-201
firematic PELLET 120-201

4- and 8-point-suction-system
(1~, 230 Volt)

for wood pellets (Ø 6mm) according
EN ISO 17225-2: Property class A1
ENplus, DINplus or Swisspellet

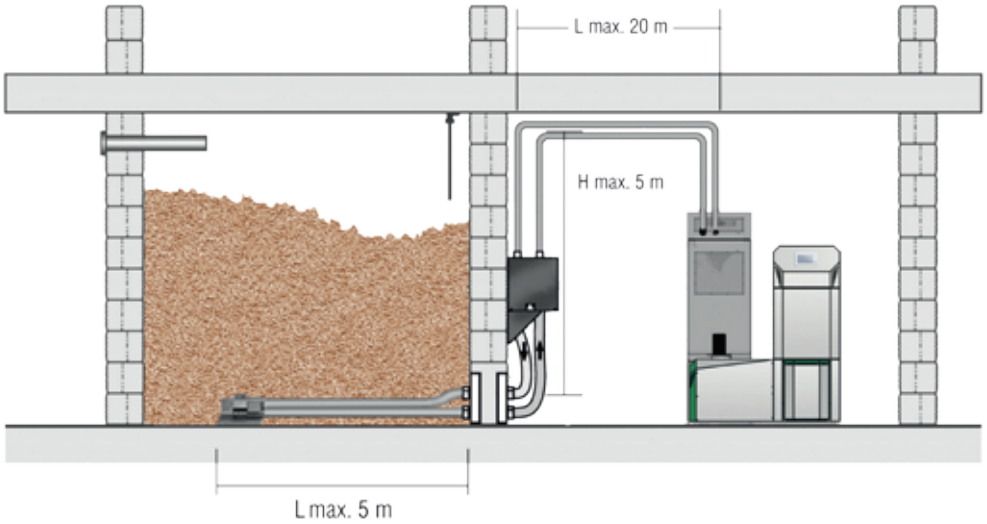

ATTENTION: At the double suction hopper it's necessary to use 2 identical dischar ges (for instance 2 agitators, 2 screws, 2 4-point or 8-point-suction-systems).

4

Basic set 4- or 8-point-suction-system consisting of:
- Pellet switch box including 4 or 8 suction points
- Internal controller to switch between the suction points
- Mounting material for suction tube and reverse air tube (20 tube clamps, stick bolts, dowels)

4-point-suction-system

pelletstar 10-60, pelletstar CONDENSATION 10-101, pelletfire 20-40, firematic 20-101, firematic CONDENSATION 30-40	P512000-000	L
firematic 120-201, firematic PELLET 120-201 (*order 2x)	P512000-000 (*)	L

8-point-suction-system

pelletstar 10-60, pelletstar CONDENSATION 10-101, pelletfire 20-40, firematic 20-101, firematic CONDENSATION 30-40	P512000-050	L
firematic 120-201, firematic PELLET 120-201 (*order 2x)	P512000-050 (*)	L

Note: Wall breakthrough at 4-point-suction-system with min. 500x220 mm, max. 625x290 mm necessary.
Note: At 8-point-suction-system 2 wall breakthroughs are necessary.

Set suction tube (F) + reverse air tube (G) incl. fixing material (per metre suction tube one wall clamp) for 4- or 8-point-suction-system (Attention: maximum bulk height for pellets = 3 m

Set	Suction tube (F) + reverse air tube (G)			Boilers ≤ 60kW	Boilers ≥ 80 kW (highly abrasion resistant)	
1	each	12,5 m	€ Art. No.	P512000-100	P512001-100	L
2	each	25 m	€ Art. No.	P512000-200	P512001-200	L
3	each	50 m	€ Art. No.	P512000-300	P512001-300	L

Fire protection set consisting of:
- 8 pieces fire protection clamps (for suction tube and reverse air tube) — P512000-800 — L
- 2 x rockwool (thickness 50 mm), metal cover in the storage room

Attention: 8-point-suction-system requires 2 fire protection sets.

Assembly surcharge 4-point-suction-system (valid in combination with boiler assembly) - (without external electrical cabling and transportation into the boiler room), (net, without discount)

in Austria	X000100-210A	*	-

Assembly surcharge 8-point-suction-system (valid in combination with boiler assembly) - (without external electrical cabling and transportation into the boiler room), (net, without discount)

in Austria	X000100-211A	*	-

* Assembly and comissioning prices are available in the „HERZ Service Folder"

Bag silo systems

Highlights

ADVANTAGES IN DETAIL

EASY AND QUICK ASSEMBLY

Assembly and installation of the bag silo system is fast and easy.

ECONOMIC

The complete system saves building-, installation- and follow-up costs, is clean and easy to maintain.

COMPATIBLE

The wide range of extraction units offers a maximum flexibility and compatibility when choosing your pellet discharge system.

CAREFUL PELLET STORAGE

The bag silo system offers ideal possibilities for careful storage of pellets. Any dust is avoided due to the filling system. During filling process the dust is sucked off through the vacuum suction neck.

COMPLETE EXTRACTION OF THE SILO

Due to the conic base parts of our systems an optimal pourability and complete emptying of the silo is given.

SAFE AND AUTOMATIC OPERATING

The bag silo system is safe and was found to be extremely reliable. In addition, the operation is fully automatic.

- Height adjustable 180 (190) – 250 cm

- Long-living, galvanised, steel cone

- Filling with vacuum device
- High-strength, anti-static fabric

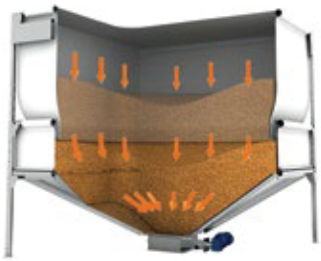

- Optimal pourability

4

Accessories				Art. No.	€	G
	Bag silo with filling system, System HERZ with transfer flange for HERZ removal unit					
	Type	Dimensions (metre)	Height (metre)	Content (tons)		
	Type 12	1,2 x 1,2	1,8 - 2,5	1,1 - 1,7	7070000-012	E
	Type 17	1,7 x 1,7	1,8 - 2,5	2,1 - 3,2	7070000-017	E
	Type 21	2,1 x 2,1	1,8 - 2,5	2,8 - 4,7	7070000-020	E
	Type 25	2,5 x 2,5	1,8 - 2,5	4,8 - 6,7	7070000-000	E
	Type 17/29	1,7 x 2,9	1,9 - 2,5	3,6 - 5,4	7070017-029	E
	Type 21/29	2,1 x 2,9	1,9 - 2,5	3,8 - 6,1	7070021-029	E
	Type 29	2,9 x 2,9	1,9 - 2,5	6,0 - 9,0	7070000-029	E
	ATTENTION: At the double suction hopper it´s necessary to use 2 identical dischar ges (for instance 2x bag silo)					
	HERZ removal unit for flexible discharge screw (U)				7070001-020	L
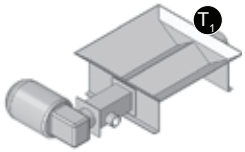	HERZ removal unit bag silo for suction system mit screw (T1)					
	pelletstar 10-60, pelletstar CONDENSATION 10-101, pelletfire 20-40, firematic 20-101, firematic CONDENSATION 30-40				7070001-010	L
	firematic 120-201, firematic PELLET 120-201 (* order 2x)				7070001-010 (*)	L
	HERZ removal unit bag silo for 1-point-suction-system (T2)					
	pelletstar 10-60, pelletstar CONDENSATION 10-101, pelletfire 20-40, firematic 20-101, firematic CONDENSATION 30-40				7070001-150	L
	firematic 120-201, firematic PELLET 120-201 (* order 2x)				7070001-150 (*)	L

Bag silo systems of the ECO-Line

Highlights

- EASY AND QUICK ASSEMBLY ✔
- ECONOMIC ✔
- COMBINABLE IN VARIOUS WAYS ✔
- SAFE AND AUTOMATIC OPERATION ✔

Bag silo

Bag silo incl. filling-fixture system and distribution nozzle (pellets coupling is not included!)

Type	Dimensions (metre)	Height (metre)	Content (tons)	Art. No.	€	G
ECO150P	1,5 x 1,5	1,8 - 2,3	1,1 - 1,7	A351518-000		E3
ECO200P	2,0 x 2,0	1,8 - 2,3	2,1 - 3,1	A352018-000		E3
ECO300P	3,0 x 3,0	1,8 - 2,3	3,6 - 6,0	A353019-000		E3
ECO150G	1,5 x 1,5	2,0 - 2,5	1,3 - 1,9	A351520-000		E3
ECO200G	2,0 x 2,0	2,0 - 2,5	2,4 - 3,4	A352020-000		E3
ECO250G	2,5 x 2,5	2,0 - 2,5	3,8 - 5,3	A352521-000		E3
ECO300G	3,0 x 3,0	2,0 - 2,5	4,6 - 7,0	A353021-000		E3
ECO170x290G	1,7 x 2,9	2,0 - 2,5	2,2 - 4,0	A351729-000		E3

Other bag silo sizes on request!
ATTENTION: For the double suction hopper it´s necessary to use 2 identical dischar ges (for instance 2x bag silo, 2x removal unit)

Accessories

		Art. No.	€	G
	HERZ removal unit bag silo for flexible discharge screw (U)			
	DM 250 for ECO150P-ECO300G	A351518-200		L
	DM 500 for ECO170x290G	A351729-200		L
	HERZ removal unit bag silo for 1-point-suction-system (T2)			
	DM 250 for ECO150P-ECO300G	A351518-330		L
	DM 500 for ECO170x290G	A351729-330		L
	Straight pellets coupling, storz system A 110, L = 0,5 m	P110457-600		Z
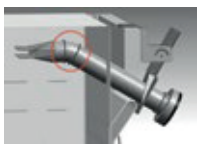	Bow (30° R=1D) for pellets coupling set including clamping ring DN100	P070100-030		Z

Flexible screw systems for pellets

Accessories		Art. No.	€	G
PELLETS **pelletfire 20-40** pelletstar 10-60 pelletstar CONDENSATION 10-101 **frematic CONDENSATION 30-40** **frematic 20-201** **frematic PELLET 120-201** **flexible pellets screw discharge** systems bag silo (1~, 230 Volt) for wood pellets (Ø 6mm) according EN ISO 17225-2: Property class A1 ENplus, DINplus or Swisspellet	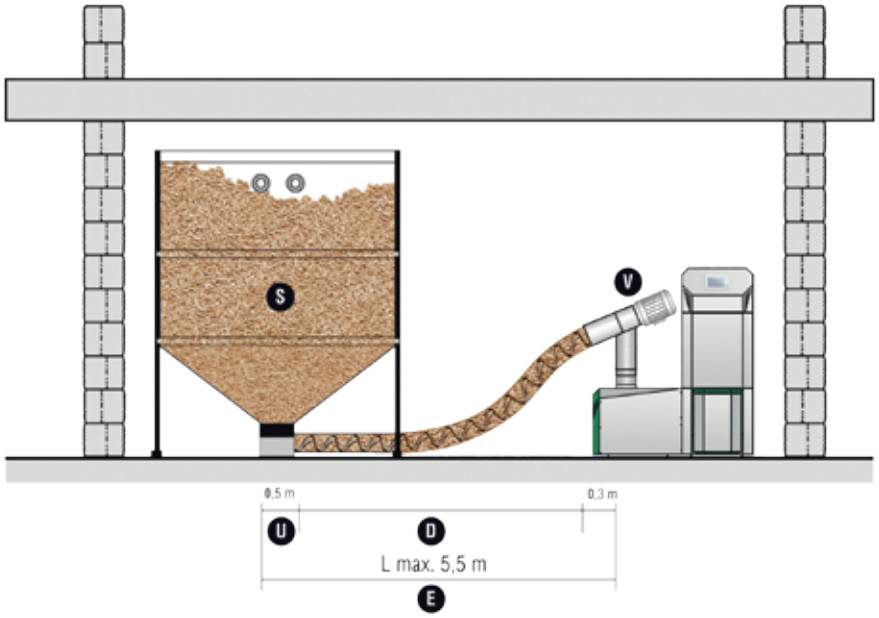 Technical details of the silo bag & the removal units: see page 61 & 62.			
	Basic set flexible screw system - for bag silo (V) consisting of: – Transfer head BFP-flap with motor – Connection clamps for transport tube			
	≤ 60 kW: pelletstar 10-60, pelletstar CONDENSATION 10-60, pelletfire 20-40, frematic 20-60, frematic CONDENSATION 30-40	A031000-010		L
	80-201 kW: pelletstar CONDENSATION 80-101, frematic 80-201, frematic PELLET 120-201	A031000-012		L
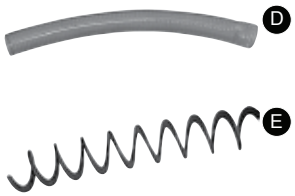	Set flexible transport tube (D) + flexible screw (E)	E = (D) + 0,5 m + 0,3 m		
	Set / Transport tube length (D) / Screw length (E)			
	3 / 5 m / 5,5 m	P400400-500		L
	Assembly bag silo (valid in combination with boiler assembly) – (net, without discount)			
	in Austria	X000100-490A	*	-

* Assembly and comissioning prices are available in the „HERZ Service Folder"

4

Flexible screw systems for pellets

Accessories		Art. No.	€	G
PELLETS **pelletfire 20-40** pelletstar 10-60 pelletstar CONDENSATION 10-101 **firematic CONDENSATION 30-40** **firematic 20-201** **firematic PELLET 120-201** **flexible pellets screw discharge** systems Bag silo system chute pipe (1~, 230 Volt) for wood pellets (Ø 6mm) according EN ISO 17225-2: Property class A1 ENplus, DINplus or Swisspellet	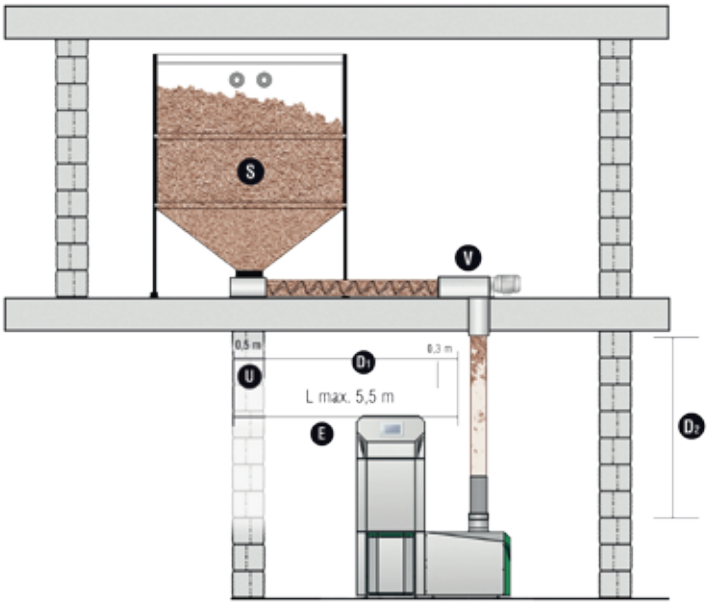 Technical details of the silo bag & the removal units: see page 61 & 62			
	Basic set chute pipe for silo bag systems (V) consisting of: – Transfer head with motor and chute pipe – Adapter for chute tube to BFP – Connection clamps for transport tube			
	≤ 60 kW: pelletstar 10-60, pelletstar CONDENSATION 10-60, pelletfire 20-40, firematic 20-60, firematic CONDENSATION 30-40	A031000-030		L
	80-201 kW: pelletstar CONDENSATION 80-101, firematic 80-201, firematic PELLET 120-201	A031000-032		L
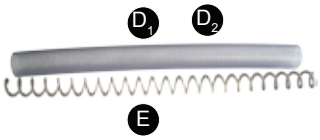	Set flexible transport tube (D) + flexible screw (E)	E = (D1) + 0,5 m + 0,3 m		
	Set / Transport tube length (D) / Screw length (E)			
	3 / 5 m / 5,5 m	P400400-500		L
	Flexible transport tube (D2) (per metre)	5020760-000		L
	Assembly bag silo (valid in combination with boiler assembly) – (net, without discount)			
	in Austria	X000100-490A	*	-

* Assembly and comissioning prices are available in the „HERZ Service Folder"

Suction systems for pellets

Accessories	Art. No.	€	G

PELLETS

pelletfire 20-40
pelletstar 10-60
pelletstar CONDENSATION 10-101
frematic CONDENSATION 30-40
frematic 20-201
frematic PELLET 120-201

System bag silo
Suction system
with screw
(1~, 230 Volt)

for wood pellets (Ø 6mm) according
EN ISO 17225-2: Property class A1
ENplus, DINplus or Swisspellet

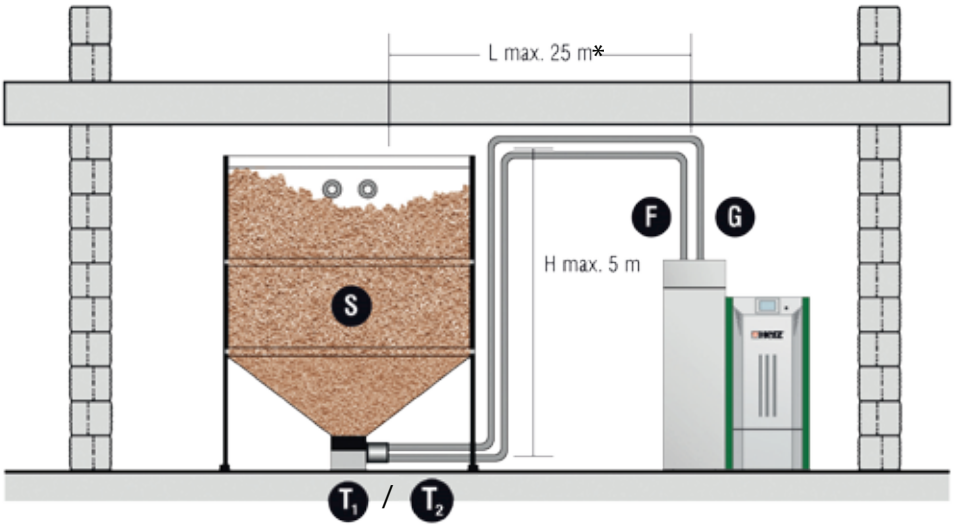

Technical details of the silo bag & the removal units: see page 61 & 62.
ATTENTION: At the double suction hopper it is necessary to use 2 bag silos

* L max. = 25 m when using T1 - removal unit for suction system with screw
L max. = 15 m when using T2 - removal unit for 1-point-suction-system

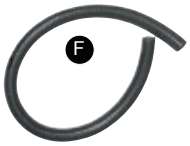

Set suction tube (F) + reverse air tube (G) incl. fixing material (per metre one wall clamp)

Set	Suction tube (F) + reverse air tube (G)			Boilers ≤ 60 kW	Boilers ≥ 80 kW (highly abrasion resistant)	
1	each	10 m	€ Art. No.	P400400-100	P400401-100	L
2	each	15 m	€ Art. No.	P400400-150	P400401-150	L
3	each	30 m	€ Art. No.	P400400-250	P400401-250	L

Assembly bag silo (valid in combination with boiler assembly) – (net, without discount)

in Austria	X000100-490A	*	-

* Assembly and comissioning prices are available in the „HERZ Service Folder"

4

Modular agitator system

Accessories	Art. No.	€	G

WOOD CHIPS & PELLETS

frematic CONDENSATION 30-40
frematic 20-201
frematic PELLET 120-201

Modular agitator system
1~ 230 Volt or
3~ 400 Volt:

for wood chips according
EN ISO 17225-4: Property class A1,A2,
B1 and particle size P16S, P31S

for wood pellets (Ø 6mm) according
EN ISO 17225-2: Property class A1, A2
ENplus, DINplus or Swisspellet

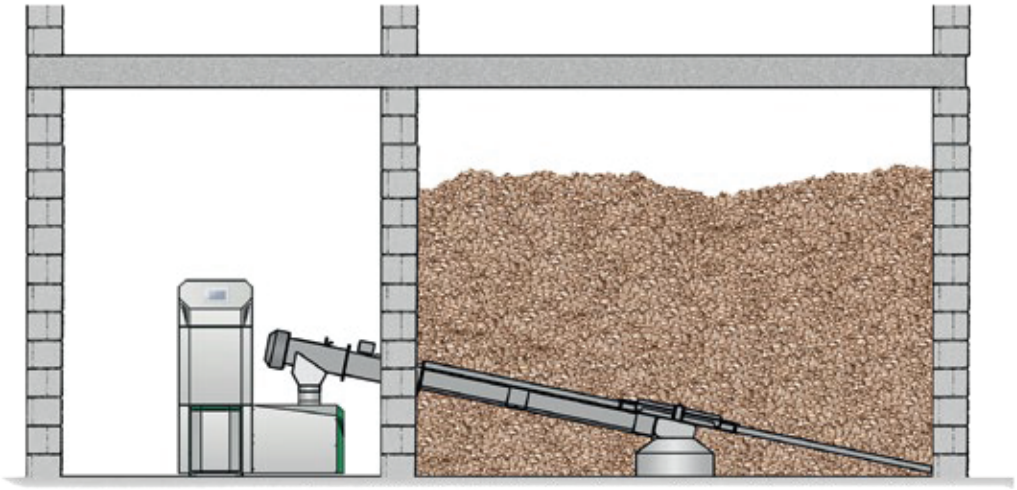

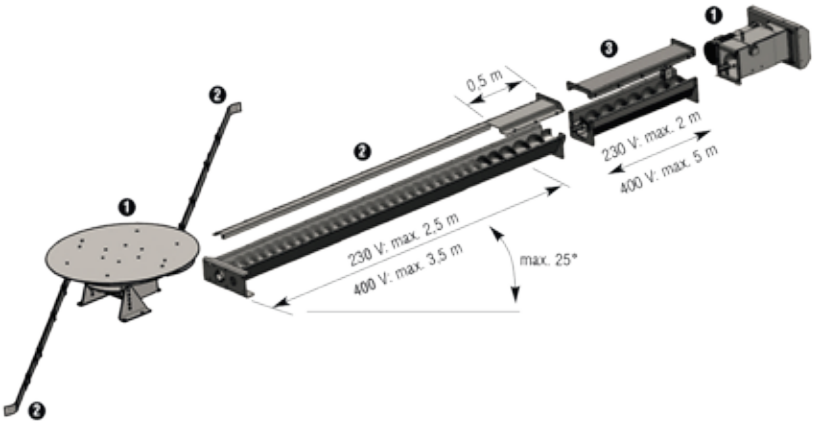

Planning notes / guidelines:	230 Volt	400 Volt
Agitator Ø [m]:	2/2,5/3/3,5/4/4,5/5	2/2,5/3/3,5/4/4,5/5/5,5/6
Length open part (trough) [m]:	max. 2,5	max. 3,5
Length closed part (extensions) [m]:	max. 2	max. 5
Max. bulk height for pellets [m]:	3	4
Max. bulk height for wood chips [m]:	4	6
Angle (the best emptying is with a horizontal installation achievable):	max. 25°	max. 25°

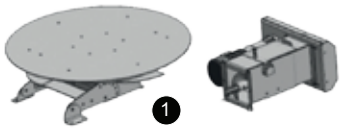

(1) Basic set modular discharge system consisting of:
- Agitator disc, console and screw
- Endpiece, motor, motor stub, gearbox

≤ 201 kW (230 Volt)	A402000-605	L
≤ 201 kW (400 Volt)	A402000-610	L

Control extension for discharge systems 400 Volt:

Internal control extension for 1 motor 400 Volt: for frematic 45-60	5120300-095	Z
External control extension for 1 motor 400V for frematic 20-60 & frematic CONDENSATION 30-40	X000100-120	Z

Modular agitator system

Accessories	Art. No.	€	G

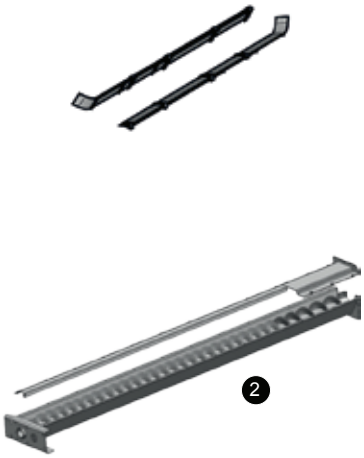

(2) Set trough consisting of:
- Spring arms (for the agitator)
- Screw channel (upper & lower part) incl. wall duct piece
- Screw

Agitator	Total length trough*	Open part	Wall duct		
Ø = 2,0 m	L_{total} = 1,50 m	Ø/2	0,5 m	A402002-602	L
Ø = 2,5 m	L_{total} = 1,75 m	Ø/2	0,5 m	A402502-602	L
Ø = 3,0 m	L_{total} = 2,00 m	Ø/2	0,5 m	A403002-602	L
Ø = 3,5 m	L_{total} = 2,25 m	Ø/2	0,5 m	A403502-602	L
Ø = 4,0 m	L_{total} = 2,50 m	Ø/2	0,5 m	A404002-602	L
Ø = 4,5 m	L_{total} = 2,75 m	Ø/2	0,5 m	A404502-602	L
Ø = 5,0 m	L_{total} = 3,00 m	Ø/2	0,5 m	A405002-602	L
Ø = 5,5 m	L_{total} = 3,25 m	Ø/2	0,5 m	A405502-602	L
Ø = 6,0 m	L_{total} = 3,50 m	Ø/2	0,5 m	A406002-602	L
Ø = 6,0 m	L_{total} = 3,75 m	Ø/2 + 0,25 m	0,5 m	A406502-602	L
Ø = 6,0 m	L_{total} = 4,00 m	Ø/2 + 0,5 m	0,5 m	A407002-602	L

* Total length = open part + wall duct piece

4

(3) Set extension consisting of:
- Closed screw channel (upper and lower part)
- Screw

Extension	L = 150 mm	A402003-601	L
Extension	L = 300 mm	A402003-603	L
Extension	L = 450 mm	A402003-604	L
Extension	L = 600 mm	A402003-606	L
Extension	L = 900 mm	A402003-609	L
Extension	L = 1200 mm	A402003-612	L
Extension	L = 1500 mm	A402003-615	L
Extension	L = 2000 mm	A402003-620	L
Extension	L = 2500 mm	A402003-625	L
Extension	L = 3000 mm	A402003-630	L

Support foot for discharge screw each 2 metres necessary (for the closed part)
5,5 metres diameter necessary (for the open part)

for open screw channel	A402002-690	L
for closed screw channel	A402003-690	L

Support foot for horizontal screw each 2 metres necessary (for the closed part)
5,5 metres diameter necessary (for the open part)

for open screw channel	A402002-680	L
for closed screw channel	A402003-680	L

Connection piece agitator system 230 Volt + 400 Volt to BFP-flap for

firematic CONDENSATION 30-40, firematic 20-501, firematic PELLET 120-201

0-20°	A082004-122	L
21-45°	A082004-130	L

Climbing screw with separate drive

Accessories	Art. No.	€	G

WOOD CHIPS & PELLETS

firematic CONDENSATION 30-40
firematic 20-201
firematic PELLET 120-201

Climbing screw with
with separate drive
(3~, 400 Volt)

for wood chips according
EN ISO 17225-4: Property class A1,A2,
B1 and particle size P16S, P31S

for wood pellets (Ø 6mm) according
EN ISO 17225-2: Property class A1, A2
ENplus, DINplus or Swisspellet

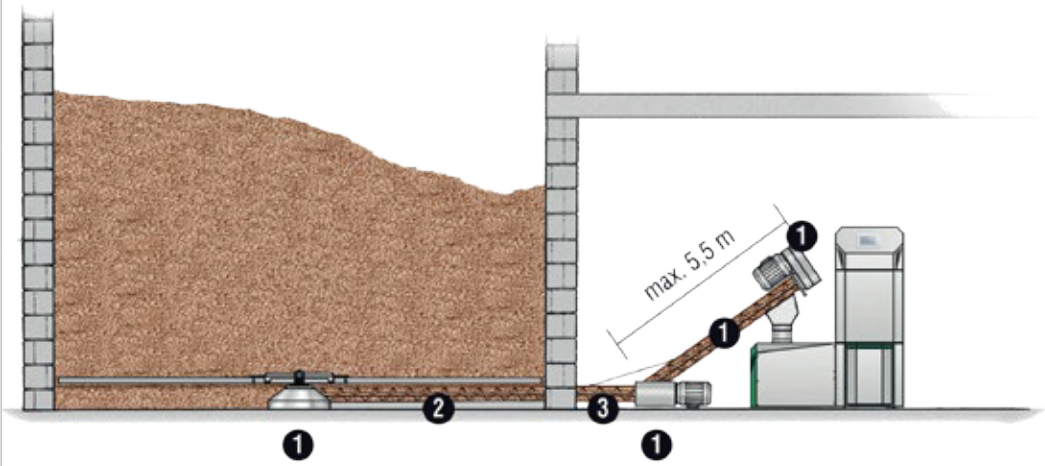

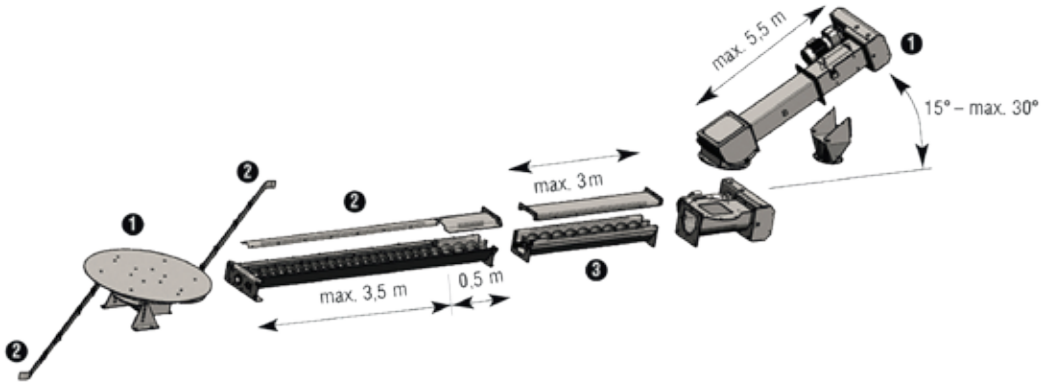

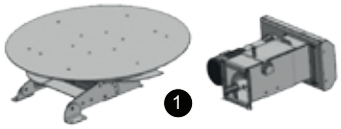

Planning notes / guidelines 400 Volt:
- Agitator Ø: 2 m / 2,5 m / 3 m / 3,5 m / 4 m / 4,5 m / 5 m / 5,5 m / 6 m
- Length open part (trough): max. 3,5 m
- Length closed part (extensions): max. 3 m
- Max. bulk height for pellets: 4 m
- Max. bulk height for wood chips: 6 m
- Angle: max. 30°

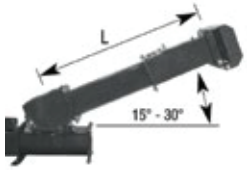

(1) Basic set modular agitator system and climbing screw with separate drive for optimum store room usage, L = 1,2 m consisting of:
- Agitator disc, motor, gearbox
- 1,2 m climbing screw, motor, gearbox

firematic CONDENSATION 30-40, firematic 20-201, firematic PELLET 120-201	A430009-100	L

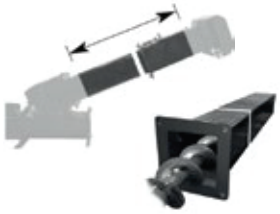

Screw extension for climbing screw per metre (max. screw length 5,5 m)

firematic CONDENSATION 30-40, firematic 20-201, firematic PELLET 120-201	A432200-110	L

Surcharge for splitted discharge system (from 4 m screw length)

firematic CONDENSATION 30-40, firematic 20-201, firematic PELLET 120-201	H060259-210	L

Control box discharge system for 2 motors for 1 discharge screw (AS1) + 1 discharge screw (AS2) or agitator (RW)	X000100-113	L

Climbing screw with separate drive

Accessories				Art. No.	€	G
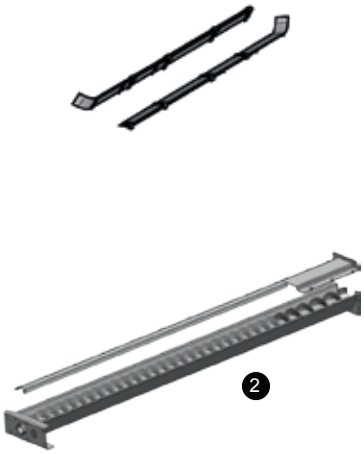	(2) Set trough consisting of: – Spring arms (for the agitator) – Channel (top & bottom) incl. wall duct piece – Screw					
	Agitator	Total length trough*	Open part	Wall duct		
	Ø = 2,0 m	L_{total} = 1,50 m	Ø/2	0,5 m	A402002-602	L
	Ø = 2,5 m	L_{total} = 1,75 m	Ø/2	0,5 m	A402502-602	L
	Ø = 3,0 m	L_{total} = 2,00 m	Ø/2	0,5 m	A403002-602	L
	Ø = 3,5 m	L_{total} = 2,25 m	Ø/2	0,5 m	A403502-602	L
	Ø = 4,0 m	L_{total} = 2,50 m	Ø/2	0,5 m	A404002-602	L
	Ø = 4,5 m	L_{total} = 2,75 m	Ø/2	0,5 m	A404502-602	L
	Ø = 5,0 m	L_{total} = 3,00 m	Ø/2	0,5 m	A405002-602	L
	Ø = 5,5 m	L_{total} = 3,25 m	Ø/2	0,5 m	A405502-602	L
	Ø = 6,0 m	L_{total} = 3,50 m	Ø/2	0,5 m	A406002-602	L
	Ø = 6,0 m	L_{total} = 3,75 m	Ø/2 + 0,25 m	0,5 m	A406502-602	L
	Ø = 6,0 m	L_{total} = 4,00 m	Ø/2 + 0,5 m	0,5 m	A407002-602	L
	* Total length = open part + wall duct piece					
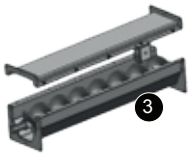	(3) Set extension consisting of: – Closed screw channel (upper and lower part) – Screw					
	Extension	L = 150 mm		A402003-601		L
	Extension	L = 300 mm		A402003-603		L
	Extension	L = 450 mm		A402003-604		L
	Extension	L = 600 mm		A402003-606		L
	Extension	L = 900 mm		A402003-609		L
	Extension	L = 1200 mm		A402003-612		L
	Extension	L = 1500 mm		A402003-615		L
	Extension	L = 2000 mm		A402003-620		L
	Extension	L = 2500 mm		A402003-625		L
	Extension	L = 3000 mm		A402003-630		L
	Support foot for horizontal screw – Each 2 metres necessary (for the closed part) – 5,5 metres diameter necessary (for the open part)					
	for open screw channel			A402002-680		L
	for closed screw channel			A402003-680		L
	Connection piece agitator system 400 Volt to BFP-flap for firematic CONDENSATION 30-40 firematic 20-501 firematic PELLET 120-201					
	0-20°			A082004-122		L
	21-45°			A082004-130		L
	Surcharge for stronger drive motor: – from 6 m transport screw length – from 2,5 m climbing screw length			X000107-000		L
	Assembly climbing screw (valid in combination with boiler assembly) - (without external electrical cabling and transportation into the boiler room), (net, without discount)					
	in Austria			X000100-466A	*	-

4

* Assembly and comissioning prices are available in the „HERZ Service Folder“

Storage room

Accessories		Art. No.	€	G
	Silencer set for wall duct (for the flexible screw or suction system)	P030120-000		Z
	Silencer set for room discharge systems agitator and wall duct	A020007-300		Z
	ATTENTION: Silencer set for wall breakthrough does not act as fire protection!			
	Temperature controlling set for storage room (TÜB) for flexible screw discharge or suction systems	PE40156-004		Z
	Fire protection clamp for suction tube or reverse air tube	5120510-463		Z
	Fire protection clamp for flexible transport tube	5120510-465		Z
	Straight pellets coupling, storz system A 110 (at least 1 blow in support and 1 suction support required in the storage room), L = 0,5 m	P110457-600		Z
	45-degree pellets coupling system, storz system A 110 (at least 1 blow in support and 1 suction support required) L = 0,5 m	P110457-645		Z
	Bow for pellets filling system including clamping ring DN100 (R=radius, D=diameter)			
	15° R=1D	P070100-015		Z
	30° R=1D	P070100-030		Z
	45° R=1D	P070100-045		Z
	60° R=2D	P070100-060		Z
	90° R=2D	P070100-090		Z
	Pipe for pellets filling system including clamping ring DN100 length:			
	0,05 m	P070100-005		Z
	0,2 m	P070100-020		Z
	0,5 m	P070100-050		Z
	1,0 m	P070100-100		Z
	2,0 m	P070100-200		Z
	Variable extension pipe for pellets filling system (insertable pipe) incl. clamping ring DN100			
	5-45 cm	P110457-605		Z

Storage room

Accessories		Art. No.	€	G
	Straight wood chip coupling, Storz system A 150 (at least 1 blow in support and 1 suction support required in the storage room), L = 0,5 m	P110000-150		L
	Bow for wood chip filling system including clamping ring DN150 (R=radius, D=diameter)			
	45° R=2D	P070150-045		L
	Pipe for wood chip coupling set including clamping ring DN150 length:			
	0,5 m	P070150-050		L
	1,0 m	P070150-100		L
	2,0 m	P070150-200		L
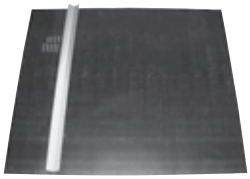	Pellets impact mat Width x height = 1,0 x 1,2 m	P150157-600		Z
	Storage room door pressure release set, z-profiles, (2 pieces) L = je 1,05 m	P150157-601		Z
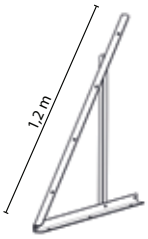	Installation profile for slide angle for 35° oder 45° assembly	P150159-201		Z
	Transport tube or chute pipe (per metre)	5020760-000		L
	Flexible screw (per metre)	5016102-160		L
	Pellets-house box including 230 Volt socket and door switch (sends burner stop signal) for single or double boiler	P110255-105		Z

5

HERZ 3-D planning tool

...in 15 minutes from the idea to the submission design, offer and 3D views

The intelligent 3D design software for HERZ biomass systems allows a professional, fast and easy creation of heating systems including object list offer and submitted plan for sales representative or heating engineers.

We set a high value on the professionalism of our partners
The software simplifies the designing effort considerably, gives you professional planning results and represents your results to the customers, generates accurate lists of planning. As well as time savings, safety and professional appearance to customers and partners.

Print 2D and 3D wave or color views
During the design work, it allows anytime a control via 3D view in color or a line drawing to be control your work.

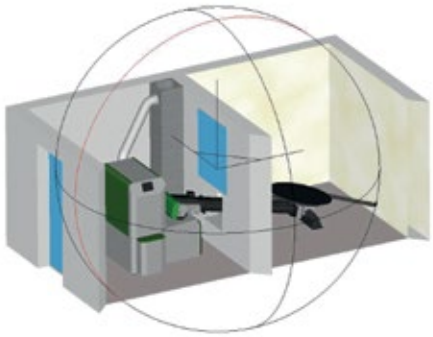
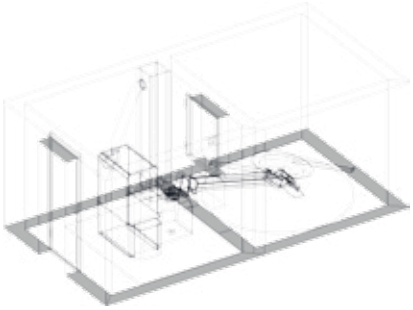
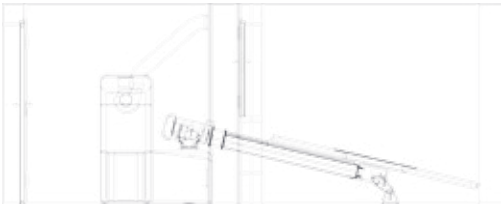
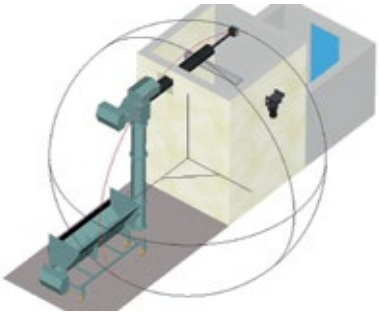
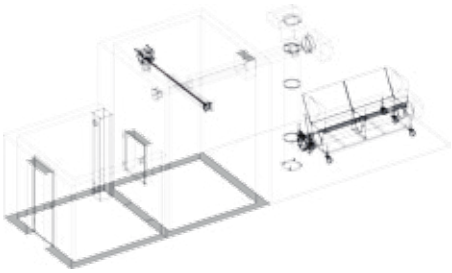
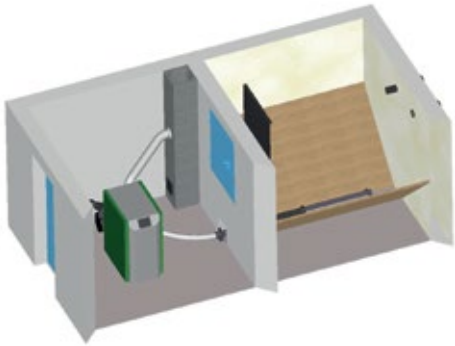

HERZ 3-D planning tool

Accessories		Art. No.	€	G
	License fee for the HERZ 3-D planning software once (NON-RECURRING FEE) (net, without discount)	GC00000-010		-
	Annual maintenance amount for the HERZ 3-D planning software (EACH YEAR) (net, without discount)	GC00000-100		-

Available languages:
German
English

In connection with the purchase of the software we offer basic and expert trainings. If possible, bring your notebook for the course with the preinstalled software.

BASIC TRAINING
In a daily training we teach the menu structure and basic settings of the 3D-Planning software. Furthermore you learn the planning processes of the software on small biomass plants and create various plans.

EXPERT TRAINING
After completion of the basic training we teach how you design specific biomass plants, such as large systems with special auger systems and screw discharge. In addition, individual questions of the training participants will be jointly worked out and explained in detail.

System requirements for this version (single user)

Hardware requirements:	
CPU/processor	– Intel i3® or more powerful from 2.0 GHz – AMD® from 2.0 GHz
Main storage	Windows 10® from 4 GB
Free storage on hard drive	minimum 4 GB
Graphic board	– with ATI® Chip from Radeon 9 series or – with Nvidia® Chip from GeForce 5 series – with minimum 256 MB dedicated storage recommended – with OpenGL support
Graphic board/screen resolution	from 1280 x 960, recommended 1600 x 1024 or higher
Others	Mouse with scroll wheel for zoom function

Software requirements:	
Operating system	MS Windows 10®
Others	– Internet access – NET Framework from 4.5 (contained in setup)

5

PUMPS & DISTRIBUTORS

Accessories		Art. No.	€	G
	HERZ Pumpfix direct 1“ – without pump Connections to the heating circuit: 1“ IT; Connections to the distributor: 5/4“ ET	4590100-001		Z
	HERZ Pumpfix direct 1“ incl. WILO Yonos Para 25/6 delivered unassembled HE-pump (high efficient-pump) Connections to the heating circuit: 1“ IT; Connections to the distributor: 5/4“ ET	4590100-002		Z
	HERZ Pumpfix MIX 1“ – without pump with Bypass, 3-way motor mixing valve Connections to the heating circuit: 1“ IT; Connections to the distributor: 5/4“ ET	4590100-003		Z
	HERZ Pumpfix MIX 1“ incl. WILO Yonos Para 25/6 delivered unassembled HE-pump (high efficient-pump), with bypass, 3-way motor mixing valve Connections to the heating circuit: 1“ IT; Connections to the distributor: 5/4“ ET	4590100-004		Z
	HERZ Pumpfix MIX constant 1“ – without pump with bypass and thermal 3-way valve Connections to the heating circuit: 1“ IT; Connections to the distributor: 5/4“ ET	4590100-005		Z
	HERZ Pumpfix MIX constant 1“ incl. WILO Yonos Para 25/6 delivered unassembled HE-pump (high efficient-pump) with bypass and thermal 3-way valve Connections to the heating circuit: 1“ IT; Connections to the distributor: 5/4“ ET	4590100-006		Z

Accessories		Art. No.	€	G
	HERZ Pumpfix manifold (distributor) 2 circuits incl. adjustable wall bracket and insulation manifold outlets to the heating circuits: 2x2x5/4" IT, manifold inlets from the boiler: 2x6/4" ET	4590100-110		Z
	HERZ Pumpfix manifold (distributor) 3 circuits incl. adjustable wall bracket and insulation manifold outlets to the heating circuits: 3x2x5/4" IT, manifold inlets from the boiler: 2x6/4" ET	4590100-111		Z
	HERZ Pumpfix manifold (distributor) 4 circuits incl. adjustable wall bracket and insulation manifold outlets to the heating circuits: 4x2x5/4" IT, manifold inlets from the boiler: 2x6/4" ET	4590100-112		Z
	HERZ Pumpfix manifold (distributor) 5 circuits incl. adjustable wall bracket and insulation manifold outlets to the heating circuits: 5x2x5/4" IT, manifold inlets from the boiler: 2x6/4" ET	4590100-113		Z
i	Note: IT = Internal thread, ET = External thread			

5

DOMESTIC HOT WATER TANK

Domestic hot water tank BWS 300 & 500
glass enamelled, incl. insulation and protection anode

Monovalent drinking water storage with a firmly welded smooth bore heat exchanger for heating and storing drinking water. Tank and heat exchanger made of quality steel. Tank externally rust protected. All surfaces which are in contact with water are protected via a glass enamelling quality certified according to DIN 4753. A magnesium anode is installed to protect against the appearance of corrosion. The domestic hot water tank is equipped with all required connections for cold and hot water, heating flow and back flow, circulation connections, sleeve for
screw-in boiler. A review opening (hand hole) is available in all tank devices.

Insulation: fixed in-foamed, hard PU foam insulation (CFC free) 50 mm

Domestic hot water tank
with solar heat exchanger BWS-R 300 & 500
glass enamelled, incl. insulation and protection

Bivalent drinking water tank with two firmly welded smooth bore heat exchangers for heating and storing drinking water. Tank and heat exchanger made of quality steel. Tank externally rust protected. All surfaces which are in contact with water are protected via a glass enamelling quality certified according to DIN 4753. A magnesium anode is installed to protect against the appearance of corrosion. The hot water tank is equipped with all required connections for cold and hot water, heating flow and back flow, circulation connections, sleeve for screw-in boiler. A review opening (hand hole) is available in all tank devices.

Insulation: fixed in-foamed, hard PU foam insulation (CFC free) 50 mm

Domestic hot water tank

		Art. No.	€	G
BWS 300	(incl. thermal insulation)	H300300-000		H
BWS 500	(incl. thermal insulation)	H300500-000		H

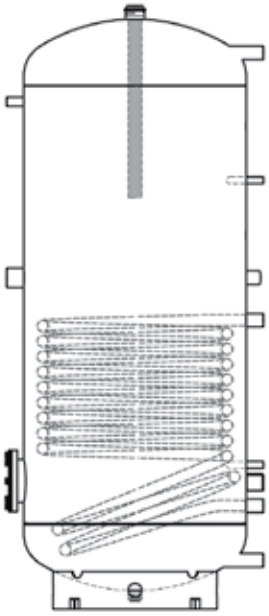

BWS	Type	300	500
D Diameter	mm	650	750
H Height incl. insulation	mm	1.532	1.777
Tilt height	mm	1.670	1.930
Weight	kg	108	144
Flange supports	DN	180	180
Steady rate according to DIN 4708*			
Heating surface	m^2	1,4	1,8
Heating output	kW	38	48
Tapping perfomance	l/h	1.092	1.381
Heating water	l/h	1.100	1.150
Energy efficiency class		B	C
Standing losses	watt	70	94
Nominal volume	litre	320	518
Vol. of the non-solar thermal store	litre	132	197
Standby losses according to ÖNORM EN 12897	kWh/24h	1,68	2,26

Domestic hot water tank with solar heat exchanger

BWS-R 300	(incl. thermal insulation)	H420300-000		H
BWS-R 500	(incl. thermal insulation)	H420500-000		H

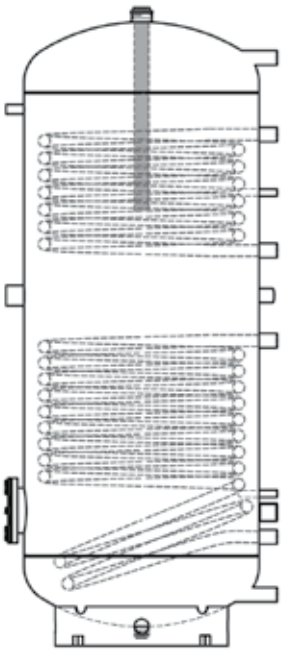

BWS-R	Type	300	500
D Diameter	mm	650	750
H Height incl. insulation	mm	1.532	1.777
Tilt height	mm	1.670	1.930
Weight	kg	124	160
Flange supports	DN	180	180
Steady rate according to DIN 4708*			
Heating surface	m^2	1,0	1,2
Heating output	kW	16	33
Tapping perfomance	l/h	471	942
Heating water	l/h	1.100	1.000
LOWER HEATING SURFACE (solar)	m^2	1,4	1,8
Heating output	kW	38	48
Tapping perfomance	l/h	1.092	1.381
Heating water	l/h	1.100	1.150
Energy efficiency class		B	C
Standing losses	watt	70	94
Nominal volume	litre	320	518
Vol. of the non-solar thermal store	litre	132	197
Standby losses according to ÖNORM EN 12897	kWh/24h	1,68	2,26

*at 80 °C flow, 45 °C domestic hot water temperature and 15 °C cold water temperature

Max. operating pressure solar side: 10 bar, domestic hot water side: 6 bar

BUFFER TANK

Buffer tank PSP 200 - 5000 for heating water, 3 bar

A buffer tank has the task of temporarily storing excessive energy and releasing it to the consumers when required.
Several buffer tank devices can be connected together to batteries.
The buffer tank devices are suitable for all hot water central heating systems (heating water).

The buffer tank is made of quality steel. The tank is rust-proof primed on the outside.
Heating water connections: 6/4“
Socket for immersion pocket: 1/2"

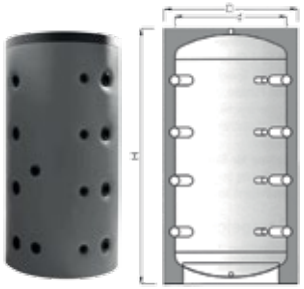

PSP

Buffer tank PSP-R 200 - 1000 for solar and heating, 3 bar, with welded-in smooth-tube exchanger

A buffer tank has the task of temporarily storing excessive energy and releasing it to the consumers when required.
Several buffer tank devices can be connected together to batteries.
The buffer tank devices are suitable for all hot water central heating systems (heating water).

The buffer tank and the heat exchanger (PSP-R) are made of quality steel. The tank is rust-proof primed on the outside. The heat exchanger connections are designed with 1" internal thread.
Heating water connections: 6/4“
Socket for immersion pocket: 1/2"

PSP-R

Insulation

PSP & PSP-R 200 - 500:	Firmly foamed in, PU rigid foam insulation (CFC-free) 50 mm
PSP-R 800 - 1000:	Separately supplied high-quality polyester fleece insulation 100 mm with PVC jacket
PSP 800 - 2000:	Separately supplied high-quality polyester fleece insulation 100 mm with PVC jacket
PSP 2050:	Separately supplied high quality polyester fleece insulation 125mm with PVC jacket
PSP 3000 - 5000	Separately supplied high-quality soft foam insulation 100 mm with PVC jacket

PSP, PSP-R		200	300	400	500	800	1000	G
PSP article number		H400203-000	H400303-000	H400403-000	H400503-000	H400800-000	H401000-000	H
PSP price	€							
PSP-R article number		H410203-000	H410303-000	H410403-000	H410503-000	H400800-100	H401000-100	H
PSP-R price	€							
Thermal insulation article number		inclusive	inclusive	inclusive	inclusive	H400801-000	H401001-000	H
Thermal insulation price	€	-	-	-	-			
Diameter D	mm	600	650	750	750	990	990	
Without insulation D	mm	**	**	**	**	790	790	
Geight H	mm	1.197	1.357	1.387	1.630	1.760	2.090	
Tilt height	mm	1.340	1.505	1.577	1.794	1.740	2.090	
Weight PSP	kg	48	57	69	79	97	114	
Weight PSP-R	kg	62	73	94	103	130	156	
Heating surface	m^2	0,8	1,2	1,5	1,8	2,4	3,0	
Energy efficiency class		B	B	C	C	C	C	
Standing losses	watt	61	68	78	92	117	144	
Nominal volume	litre	205	286	405	490	732	925	
Vol. of the non-solar thermal store	litre	79	102	156	187	276	340	
Standby losses according to ÖNORM EN 12897	kWh/24h	1,46	1,63	1,87	2,21	2,81	3,46	

** fix in-foamed

PSP		1250	1500	2000 1)	2050 1)	3000 1)	5000 1)	G
PSP article number		H401250-000	H401500-000	H402000-000	H402050-000	H403000-000	H405000-000	H
PSP price	€							
Thermal insulation article number		H401250-001	H401501-000	H402001-000	H402051-000	H403001-000	H405001-100	H
Thermal insulation price	€							
Diameter D	mm	1.150	1,200	1,300	1.350	1.450	1.800	
Without insulation D	mm	950	1.000	1.100	1.100	1.250	1.600	
Height H	mm	2.060	2.200	2.420	2.440	2.700	2.950	
Tilt height	mm	2.090	2.215	2.450	2.450	2.705	3.010	
Weight PSP	kg	146	162	225	225	280	504	
Heating surface	m^2	3,0	3,6	4,2	4,2	4,2	6,0	
Energy efficiency class		C	C	D	C			
Standing losses	watt	157	170	204	190			
Nominal volume	litre	1.284	1.515	2.054	2.054			
Vol. of the non-solar thermal store	litre	474	574	729	729			
Standby losses according to ÖNORM EN 12897	kWh/24h	3,77	4,09	4,90	4,56			

1) Ex factory in Austria!

6

Accessories

Surcharge flange connection PN6 for HERZ buffer tanks (indicate amount when ordering)

Power input into the buffer	Recommended dimension	Art. No.	€	G
> 150 kW	DN 50	X000102-050	51,90	H
> 200 kW	DN 65	X000102-065	71,-	H

PN10, PN16 on request!

The form „buffer tanks customised“ on page 88 has to be completed and attached to the order!

STRATIFIED BUFFER TANK
for modern energy management

Stratified buffer tank PSP-SL 500 - 1500

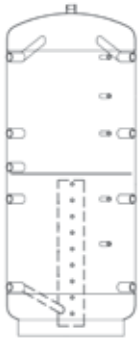

- Tank made of quality steel
- Operation pressure max. 3 bar
- Stration plate
- Stration unit
- 9 sockets 6/4“ internal thread
- 5 sockets 1/2“ internal thread
- Socket for air vent valve 6/4“

Stratified buffer tank PSP-SL-R 500 - 1500

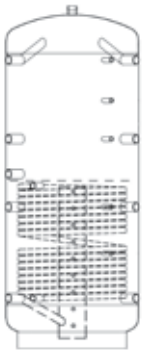

- Tank made of quality steel
- Operation pressure max. 3 bar
- Stration plate
- Stration unit
- 9 sockets 6/4“ internal thread
- 5 sockets 1/2“ internal thread
- Socket for air vent valve 6/4“

PSP-SL-R:
with one high performance pipe heat exchanger,
connections 1“

Stratified buffer tank PSP-SL-RR 500 - 1500

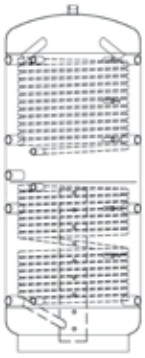

- Tank made of quality steel
- Operation pressure max. 3 bar
- Stration plate
- Stration unit
- 9 sockets 6/4“ internal thread
- 5 sockets 1/2“ internal thread
- Socket for air vent valve 6/4“

PSP-SL-RR:
with two high performance pipe heat exchanger,
connections 1“

Insulation:

PSP-SL, PSP-SL-R, PSP-SL-RR 500	Firmly foamed-in, PU rigid foam insulation (CFC-free) 50 mm
PSP-SL, PSP-SL-R & PSP-SL-RR 800 - 1500	Separately supplied high-quality polyester fleece insulation 100 mm with PVC jacket

PSP-SL PSP-SL-R PSP-SL-RR	Type	500	800	1000	1250	1500	G
PSP-SL	€ Art. No.	H600500-100	H600800-000	H601000-000	H601250-000	H601500-000	H
PSP-SL-R	€ Art. No.	H600501-100	H600801-000	H601001-000	H601251-000	H601501-000	H
PSP-SL-RR	€ Art. No.	H600502-100	H600802-000	H601002-000	H601252-000	H601502-000	H
Insulation Art. No. for PSP-SL, PSP-SL-R, PSP-SL-RR	€	inclusive	H400801-000	H401001-000	H401250-001	H401501-000	H
D Diameter	mm	750	990	990	1.150	1,200	
D Without insulation	mm	**	790	790	950	1.000	
H Height incl. insulation	mm	1.630	1.760	2.090	2.060	2.200	
Tilt height	mm	1.794	1.740	2.090	2.090	2.215	
Weight PSP-SL	kg	90	112	132	162	182	
Weight PSP-SL-R	kg	114	145	170	205	225	
Weight PSP-SL-RR	kg	131	169	204	240	254	
Size of heat exchanger PSP-R	m^2						
Bottom PSP-SL-R & PSP-SL-RR		1,8	2,4	3,0	3,0	3,6	
Top PSP-SL-RR		1,2	1,8	2,4	2,4	2,4	
Energy efficiency class		C	C	C	C	C	
Standing losses	watt	92	117	144	157	170	
Nominal volume	litre	490	732	925	1.284	1.515	
Vol. of the non-solar thermal store	litre	187	276	340	474	574	
Standby losses according to ÖNORM EN 12897	kWh/24h	2,21	2,81	3,46	3,77	4,09	

** fix foamed-in

6

FRESH WATER MODULE FOR HYGIENIC DOMESTIC HOT WATER PREPARATION

Fresh water module

Compact pre-mounted unit for hygienical warm water preparation. The fresh water module produces domestic hot water after the flow principle which prevents development of legionella and guarantees lowest standby losses. The primary pump pumps the heating water from the buffer tank through a temperature control unit by 2-way-plate heat exchanger, so fresh water will be heated up that the fixed water temperature is reached. The buffer water is maximally cooled both in the inlet and outlet of the heat exchanger and thus excludes heat-related calcification.

STANDARD VERSION

• 2-way-plate heat exchanger	✔
• Primary pump (ErP ready)	✔
• Flow switch and thermostat	✔
• Heat insulation	✔
• Push-in connection for circulation unit	✔

BENEFITS

- No domestic water tank necessary - no storage of warm water!
- Only the amount of domestic hot water which is used by the tap, is heated
- 100 % self-venting
- Easy assembly due to its compact design, minimal plumbing effort mounted directly on the wall
- Smallest construction
- Can be used in a variety of ways: detached and semi-detached houses, sports facilities, retirement homes, hotels, etc.

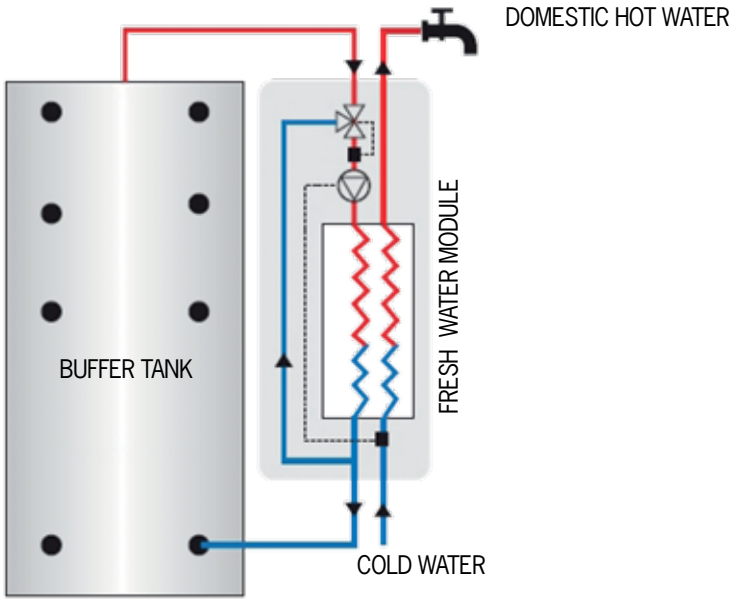

SCHEME ILLUSTRATION

BioFresh eco

WP-Fresh hydro

BioFresh eco - biomass

	Art. No.	€	G
BioFresh eco 30	SP4FW02-030		H

Technical data BioFresh eco 30

Dimensions W/H/D mm	400/600/292
Maximum tapping volume litre/min.	30
Primary circulation pump	Yonos Para
Connection dimensions for the heating and plumping part	R 1″
Max. operating temperature	95 °C

WP-Fresh hydro - biomass

	WP-Fresh hydro 40	SP4FW03-040	H
	WP-Fresh hydro 40 with INOX (stainless steel) - heat exchanger	SP4FW03-046	H
	WP-Fresh hydro 80*	SP4FW03-080	H
	WP-Fresh hydro 120*	SP4FW03-120	H
	WP-Fresh hydro 160*	SP4FW03-160	H
	* 2, 3 or 4 times WP-Fresh hydro 40, cascade valves, control master with communication module		
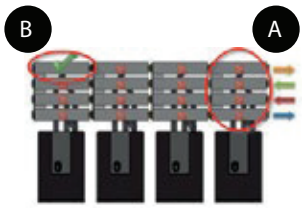	Cascade piping set Info:1 pcs. per module necessary!	SP4FW02-130	H
	Cascade hygienic set Info: Only possible in combination with the piping set!	SP4FW02-131	H

Technical data WP-Fresh hydro	40	80	120	160
Dimensions W/H/D mm	400/600/302	800/600/302	1200/600/302	1600/600/302
Maximum tapping volume litre/min.	40	80	120	160
Primary circulation pump	Yonos Para	-	-	-
Connection dimensions for the heating and plumping part	R 1″	R 1″	R 1″	R 1″
Max. operating temperature	95 °C	95 °C	95 °C	95 °C

Circulation set for BioFresh eco & WP-Fresh hydro

	Circulation set (6 m) consisting of: Push-in adapter 3/4“, pump, ball valves, non-return valve, circulation tappet	SP4FW02-140	H
	Circulation pump 6 m for cascade	SP4FW02-142	H
	Circulation pump 10 m for cascade	SP4FW02-141	H

6

MULTIFUNCTION STORE

Multifunction store Type 800 / 1000

The multifunction store guarantees optimal storage stratification and energy distribution. Specially fabricated components (stration plates, inflow deflector plates, position of the nozzle etc.) and an intelligent construction characterise this high performance storage tank. Excellent part load and nominal load behavior is the result.

STANDARD VERSION

- Two-zone-buffer tank ✔
- Hygienic hot water preparation 40 l/min ✔
- Connection kit for easy installation ✔
- Connection for electric heater ✔

OPTIONAL

- Heating circuit unit for max. 2 low temperature heating circuits
- Buffer connection for solar system or additional boiler (optional)

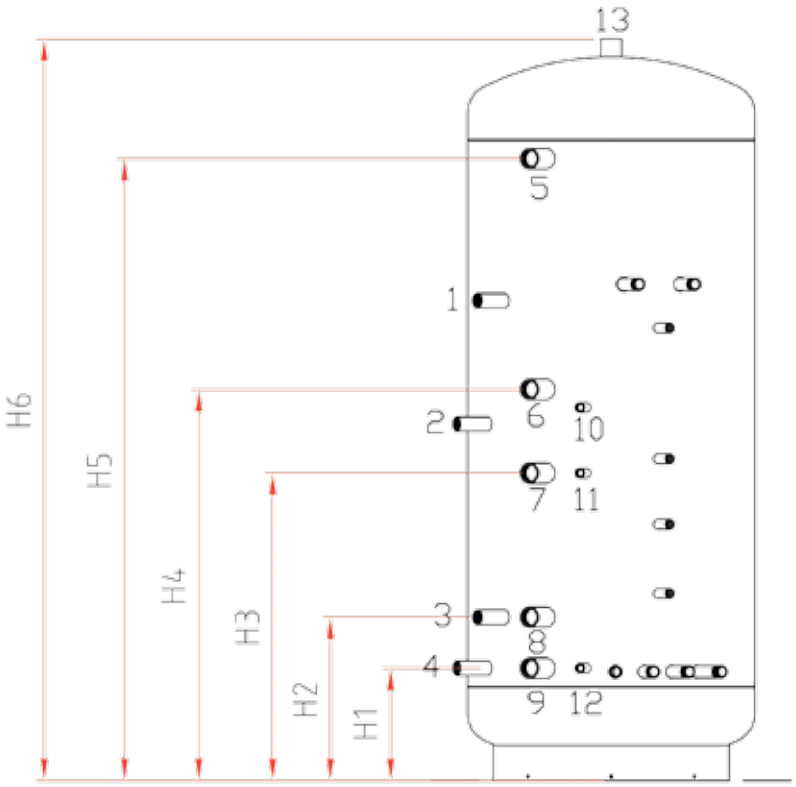

Multifunction store

	Art. No.	€	G
Tank (incl. thermal insulation) & fresh water module 40 litre/min.			
Type 800	W001800-451		H
Type 1000	W001000-451		H

Multifunction store	Type	800	1000
Nominal pressure tank	bar	3	3
Nominal volume TOP (domestic hot water)	l	468	604
Nominal volume BOTTOM (domestic heating)	l	332	396
Tilt height	mm	1.740	2.090
Height	mm	1.689	2.041
Diameter incl. insulation	mm	990	990
Tapping performance	l/min	40	40
Weight	kg	118	153

Connections

1. Flow for domestic hot water tank loading
2. Back flow for domestic hot water tank loading
3. Flow for buffer tank loading
4. Back flow for buffer loading
5. Flow - additional heating system for domestic hot water tank loading
6. Back flow - additional heating system for domestic hot water tank loading
7. Flow - additional heating system for buffer tank loading
8. Electrical heating (E-heater)
9. Back flow - additional heating system for buffer tank loading
10. Hot water tank sensor
11. Buffer top sensor
12. Buffer bottom sensor
13. Safety group

H1 Height (Back flow - additional heating system for buffer tank loading)
H2 Height (Electrical heater)
H3 Height (Flow-additional heating system for buffer tank loading)
H4 Height (Back flow-additional heating for domestic hot water tank loading)
H5 Height (Flow-additional heating for domestic hot water tank loading)
H6 Height (safety group)

Accessories

	Art. No.	€	G
HERZ Pumpfix hybrid tower 1 NT-HK (low temperature heating circuit)	4590100-050		G
HERZ Pumpfix hybrid tower 2 NT-HK (low temperature heating circuit)	4590100-060		G
Solar station Sunny up to 25 m² (incl. own integrated control + HE-pump)	4590100-070		G

6

TANK

Accessories		Art. No.	€	G
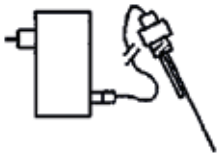	Current anode, 1/2", maintenance-free, instead of magnesium. Anodes can be replaced in all tank sizes	H400001-200		H
	Screw-in radiator for 6/4" socket, 2.5 kW, 230 V; Length: 320mm	H400064-025		H
	Screw-in radiator for 6/4" socket, 3,0 kW, 230 V; Length: 320mm	H400064-030		H
	Screw-in radiator for 6/4" socket, 4,5 kW, 230 V; Length: 480mm	H400064-046		H
	Screw-in radiator for 6/4" socket 3,0 kW, 3~400 V; Length: 300 mm	H400064-031		H
	Screw-in radiator for 6/4" socket, 4.5 kW, 3~400 V; Length: 450mm	H400064-045		H
	Screw-in radiator for 6/4" socket, 6.0 kW, 3~400 V; Length: 600mm	H400064-060		H
	Screw-in radiator for 6/4" socket, 9.0 kW, 3~400 V; Length: 700 mm	H400064-090		H
	Stainless steel corrugated pipe connector 6/4" - DN 32 for buffers till 1000 litre (price per piece)	SP4WV01-101		H

NOTES

6

Form for buffer tanks customised

Order No.	

Hinweis! Bitte bitte immer ein Formular pro Type verwenden
Notice! Please, use always a form per design.

Basis Puffer inkl. 4 Muffen 1/2" mit Fußring
Basis thermal store with 4 sockets 1/2" and footrim

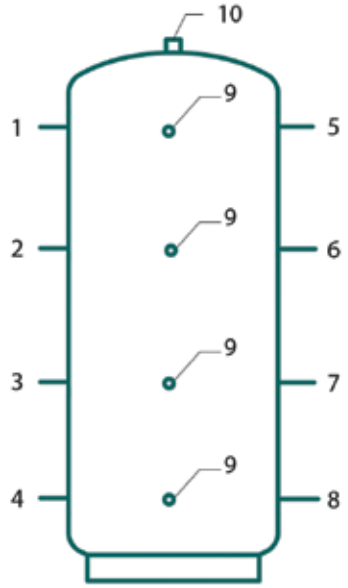

Auf- und Einbauten / *Components*

Muffe / *Socket*
Bitte unten in der Tabelle angeben
Please indicate in the table below

Flansch / *Flange*
Bitte unten in der Tabelle angeben
Please indicate in the table below

PN _____

Krümmer / *Snorkel*
Anzahl/*Number:*_____

Bei Nr / *at Nr.:* _____

ev. auf Abbildung einzeichnen
If needed indicate on the design

Solarregister / *Solar coil*

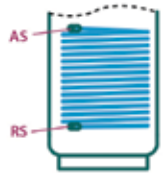

Bitte wenn betreffend hier einkreuzen
Please, if concerning mark the square below

Standfüße / *Supporting legs*
Standardmäßig bei 4000 und 5000 L
by default on 4000 and 5000 L

Bitte wenn betreffend hier einkreuzen
Please, if concerning mark the square below

11 Entleerung / ***Drain socket***

Entleerung nur bei der Ausführung mit Standfüßen möglich
Drain socket possible only with supporting legs

Max. Betriebsdruck 3 bar / max. Betriebstemperatur 95°C
Max. operating pressure 3 bar
Max. operating temperature 95°C

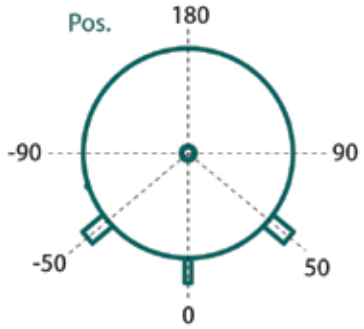

Nr.	Bezeichnung / *Description*	Dimension	Pos.
1			
2			
3			
4			
5			
6			
7			
8			
9	Muffe / *Socket*	1/2"	
10	Entlüftung / *Socket for air vent*	1 1/2"	
11			

) bei Anzahl die Type und Menge angeben / * **Indication specifies the model and quantity needed*

* Anzahl * Indication	Type	1-5 (9) #	2-6 (9)	3-7 (9)	4-8 (9) #	RS	AS	H	Ø D	R	m²
	800	1426	1026	626	256	256	801	**1686**	790	1740	2,4
	1000	1720	1249	844	300	300	970	**2041**	790	2090	3,0
	1250	1700	1239	784	300	300	970	**2017**	950	2090	3,0
	1500	1750	1285	900	350	350	1000	**2152**	1000	2210	3,6
	2000	2025	1489	959	325	325	1105	**2377**	1100	2450	3,6
	2500	2058	1528	938	358	358	1158	**2443**	1200	2515	4,2
	3000	2250	1700	950	350	350	1400	**2635**	1250	2705	4,2
	4000	2387	1837	1087	487	487	1537	**2818**	1400	2910	5,0
	5000	2400	1770	1120	540	540	1540	**2880**	1600	3010	6,0

*# Die Position variiert in Abhängigkeit der Dimension des Stutzens / # **Position varies according to the size of the connection***

PLANUNGSBOGEN BIOMASSE-ANLAGEN

PLANNING ASSISTANCE BIOMASS BOILERS

Name: (name) _____

Anschrift: (address) _____

PLZ / Ort: (postcode/city) _____

Tel.Nr.: (phone) _____

Fax: _____

E-Mail: _____

Bearbeiter: (agent) _____

Datum: (date) _____

Abgabetermin: (closing date) _____ KW (week)

Baustelle: (building site) _____

Anlieferung per: (delivery per)

- LKW mit Bühne: (truck with platform) ☐
- LKW mit Kran: (truck with crane) ☐
- Hubwagen erf.: (handlift required) ☐

Heizungsbauer / Installateur (technical firm/plumber):

Produkt / Anlagentyp/Brennstoff (type of product / fuel) _____

Leistung: (power) _____ kW (kilowatt)

Bestehend (existing):

Heizkreise: (heating circuits) _____ Stk.: (numbers) _____

a´ HK: (radiator circuit) _____ FBH: (floorheating) _____ WW: (hotwater) _____

Boiler: (hot water tank) _____ lt. (liter/litre)

Pufferspeicher: (buffer) _____ lt. (liter/litre)

Zusatzkessel: (additional boiler) _____ kW (kilowatt)

Rücklaufanhebung: (backflow set) ☐ ja (yes) ☐ nein (no)

Einbringöffnung [Länge, Breite, Höhe]: (contribution space) [length, width, high] _____ mm

Geplant (planned):

Heizkreise: (heating circuits) _____ Stk.: (numbers) _____

a´ HK: (radiator circuit) _____ FBH: (floorheating) _____ WW: (hotwater) _____

Boiler: (hot water tank) _____ lt. (liter/litre)

Pufferspeicher: (buffer) _____ lt. (liter/litre)

Zusatzkessel: (additional boiler) _____ kW (kilowatt)

Rücklaufanhebung: (backflow set) ☐ ja (yes) ☐ nein (no)

Thermostat-/ Motorventil: (thermostatic/motor valve) ☐ ☐

Brauchwassermodul (domestic water module): _____ lt. (liter)

Heizraum (boiler room):

Länge: (length) _____ mm

Breite: (width) _____ mm

Höhe: (height) _____ mm

Kaminquerschnitt: (chimney dimension) _____ mm

Kaminhöhe: (chimney height) _____ mm

Kaminsanierung erforderlich: (chimney renovation essential)

ja (yes) ☐ nein (no) ☐

Lagerraum (storage room):

Länge: (length) _____ mm

Breite: (width) _____ mm

Höhe: (height) _____ mm

Austragung: (transport system) _____ mm

Wandstärke: (wall thickness) _____ mm

Steigschnecke: (climbing screw) ☐ ja (yes) ☐ nein (no)

Please fill in and fax to us: +43(0)3357 / 42840-190

7

PLANNING ASSISTANCE BIOMASS BOILERS

SKETCH ESSENTIAL!

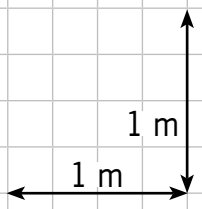

Please fill in and fax to us: **+43(0)3357 / 42840-190**

NOTES

7

TECHNICAL DATA

firestar 18/20/30/40

Model range Lambda ECO

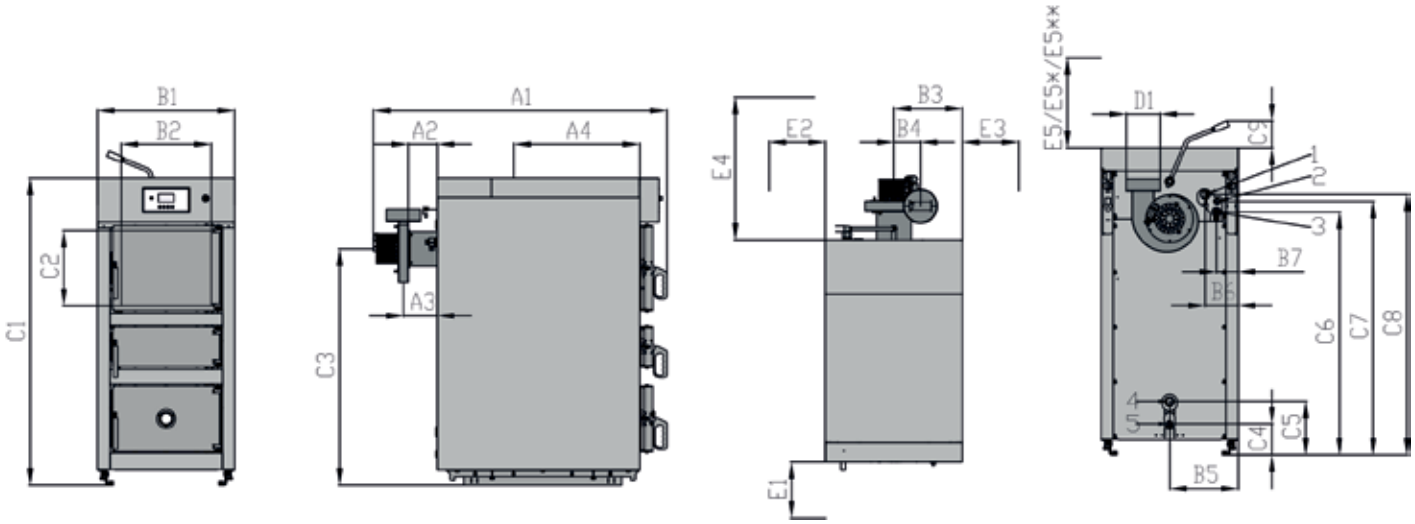

ECO Line: Technical data firestar Lambda			18	20	30	40
Output range		kW	7,6 - 18,0	9,0 - 22,0	9,0 - 30,0	9,0 - 40,0
Dimensions						
A1	Length - total	mm	1305	1340	1340	1340
B1	Width	mm	610	670	670	670
B2	Width - filling shaft door	mm	400	460	460	460
C1	Height	mm	1365	1595	1595	1595
C2	Height - filling shaft door	mm	335	390	390	390
C3	Height flue pipe - centre	mm	1050	1280	1280	1280
C4	Height - filling/emptying connection	mm	135	135	135	135
C5	Height back flow connection	mm	235	240	240	240
C8	Height flow connection	mm	1155	1380	1380	1380
D1	Diameter flue pipe	mm	Øa 150	Øa 150	Øa 150	Øa 150
E1	Minimal gap	mm	600	600	600	600
E2	Minimal gap	mm	250 / (500)	250 / (500)	250 / (500)	250 / (500)
E2	Minimal gap	mm	250 / (500)	250 / (500)	250 / (500)	250 / (500)
E4	Minimal gap	mm	600	600	600	600
E5	Minimal gap	mm	370	370	370	370
	Installation dimensions / when dismantling parts - depth	mm	1175/110	1210/1100	1210/1100	1210/1100
	Installation dimensions / when dismantling parts - width	mm	610/570	670/590	670/590	670/590
	Installation dimensions / when dismantling parts - height	mm	1365/1320	1595/1570	1595/1570	1595/1570
1	Connection flow		1“ IT	5/4“ IT	5/4“ IT	5/4“ IT
2	Sensor sleeve safety heat exchanger		-	-	-	-
3	Safety heat exchanger connection		1/2“ ET	1/2“ ET	1/2“ ET	1/2“ ET
4	Connection back flow		1“ IT	5/4“ IT	5/4“ IT	5/4“ IT
5	Connection filling/draining		1/2“ IT	1/2“ IT	1/2“ IT	1/2“ IT

IT Internal thread

ET External thread

Subject to technical modifications.

The specified free area have to be strictly adhered to when carrying out maintenance and service work. It is recommended to leave a free area of at least 500 mm at either E2 or E3 to get behind the boiler.

TECHNICAL DATA

firestar 18/20/30/40

Model range Lambda ECO

firestar 18

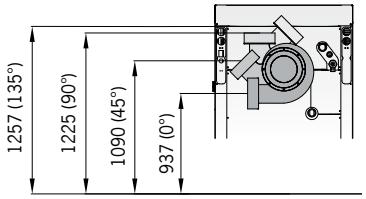

firestar 20/30/40

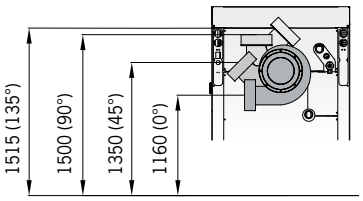

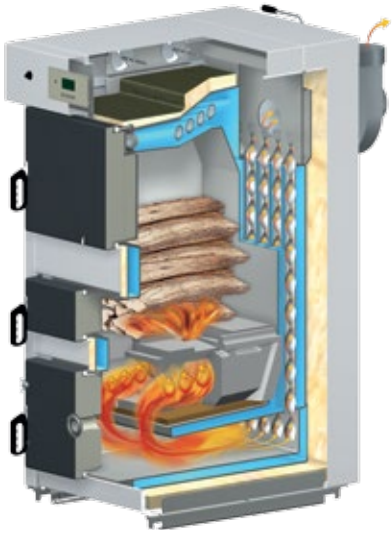

ECO Line: Technical data firestar Lambda		18	20	30	40
Boiler weight	kg	470	564	564	564
Filling shaft capacity	ltr.	120	175	175	175
Combustion efficiency ηF	%	>90	>93	>91	>92
Min./max. permissible feed pressure (underpressure)	Pa	5/20	5/20	5/20	0,05/0,20
Max. operating overpressure max.	bar	3,0	3,0	3,0	3,0
Max. permissible operating temperature	°C	90	90	90	90
Water capacity	ltr.	85	108	108	108
Electr. connection (V,Hz,A) / connected load	kW	230,50,10/0,1	230,50,10/0,1	230,50,10/0,1	230,50,10/0,1
Values at nominal load					
Flue gas temperature	°C	~140	~120	~150	~170
Flue gas mass flow	kg/s	0,010	0,011	0,018	0,023
CO_2 content	Vol. %	15,56	15,42	15,39	15,68
Values at part load					
Flue gas temperature	°C	~80	~80	~80	~80
Flue gas mass flow	kg/s	0,005	0,006	0,006	0,006
CO_2 content	Vol. %	13,91	13,54	13,54	13,54
Energy efficiency class					
Biomass boiler		A+	A+	A+	A+
Biomass boiler with integrated system controller		A+	A+	A+	A+

Door hinge right or left possible!

Subject to technical modifications.

8

TECHNICAL DATA

firestar 18/20/30/40

Model range Lambda & De Luxe

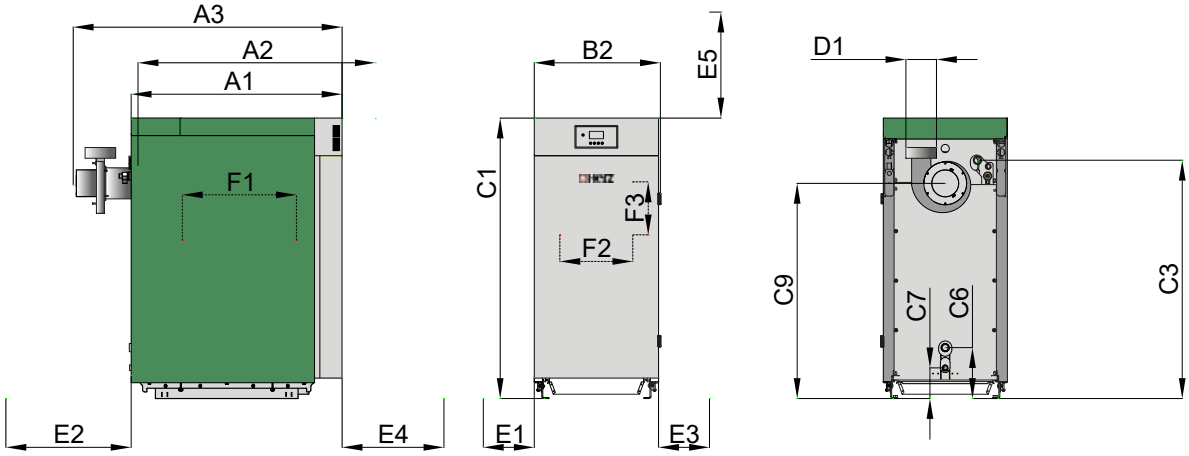

Technical data firestar			18	20	30	40
Output range		kW	7,6 - 18,0	9,0 - 22,0	9,0 - 30,0	9,0 - 40,0
Dimensions						
A1	Length - casing	mm	1035	1035	1035	1035
A2	Length up to the end of the flue gas pipe	mm	1165	1165	1165	1165
A3	Length - total	mm	1319	1352	1352	1352
B2	Width	mm	619	679	679	679
C1	Height	mm	1377	1607	1607	1607
C3	Height - flow connection	mm	1170	1395	1395	1395
C6	Height - back flow connection	mm	250	255	255	255
C7	Height - filling/draining connection	mm	151	151	151	151
C9	Height - flue pipe centre	mm	1056	1285	1285	1285
D1	Flue pipe - diameter	mm	Øa 150	Øa 150	Øa 150	Øa 150
E1	Minimal gap left	mm	250	250	250	250
E2	Minimal gap backward	mm	600	600	600	600
E3	Minimal gap right	mm	250	250	250	250
E4	Minimal gap ahead	mm	600	600	600	600
E5	Minimal gap	mm	370	370	370	370
F1	Filling shaft length	mm	560	560	560	560
F2	Filling shaft: clear width	mm	358	418	418	418
F3	Filling shaft: clear height	mm	260	305	305	305
	Installation dimensions - depth	mm	1165 (A2)	1165 (A2)	1165 (A2)	1165 (A2)
	Installation dimensions - width	mm	619 (B2)	679 (B2)	679 (B2)	679 (B2)
	Installation dimensions - height	mm	1377 (C1)	1607 (C1)	1607 (C1)	1607 (C1)
1	Connection flow		1“ IT	5/4“ IT	5/4“ IT	5/4“ IT
2	Connection back flow		1“ IT	5/4“ IT	5/4“ IT	5/4“ IT
4	Connection filling/emptying		1/2“ IT	1/2“ IT	1/2“ IT	1/2“ IT
6	Safety heat exchanger connection		1/2“ ET	1/2“ ET	1/2“ ET	1/2“ ET

IT Internal thread
ET External thread

Subject to technical modifications.

The specified free area have to be strictly adhered to when carrying out maintenance and service work. It is recommended to leave a free area of at least 500 mm at either E1 or E3 to get behind the boiler.

TECHNICAL DATA

firestar 18/20/30/40

Model range Lambda & De Luxe

firestar 18

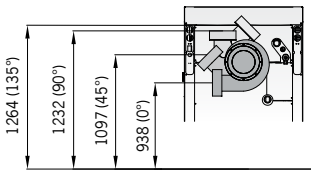

firestar 20/30/40

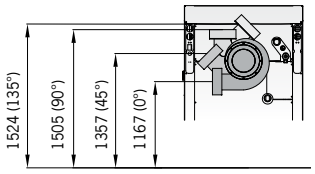

Technical data firestar		18	20	30	40
Boiler weight	kg	510	622	622	622
Filling shaft capacity	ltr.	110	160	160	160
Combustion efficiency ηF	%	>90	>93	>93	>92
Min./max. permissible feed pressure (overpressure)	Pa	5/20	5/20	5/20	0,05/0,20
Permissible excess operating pressure	bar	3,0	3,0	3,0	3,0
Max. permissible flow temperature	°C	90	90	90	90
Water capacity	ltr.	85	108	108	108
Electr. connection (V,Hz,A) / connected load	kW	230/50/16/0,1	230/50/16/0,1	230/50/16/0,12	230/50/16/0,13
Values at nominal load					
Flue gas temperature	°C	~150	~90	~120	~130
Flue gas mass flow	kg/h	39,3	49,0	66,7	91,2
CO_2 content	Vol. %	14,39	11,79	13,36	13,58
Values at part load					
Flue gas temperature	°C	~80	~80	~80	~80
Flue gas mass flow	kg/h	18,7	22,5	22,5	22,5
CO_2 content	Vol. %	13,90	13,90	13,90	13,90
Energy efficiency class					
Biomass boiler		A+	A+	A+	A+
Biomass boiler with integrated system controller		A+	A+	A+	A+

Door hinge right or left possible!

Subject to technical modifications.

8

TECHNICAL DATA

pelletfire 20/30/40

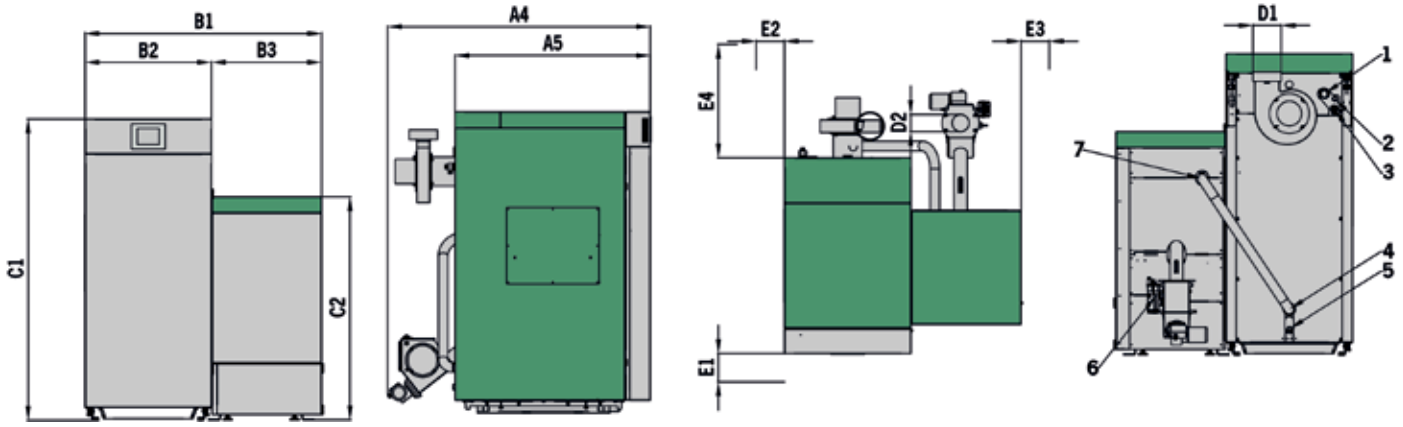

Technical data pelletfire			20/20		30/30		40/40	
			log wood	pellets	log wood	pellets	log wood	pellets
Output range		kW	9,0 - 22,0	6,1 - 20,0	9,0 - 30,0	6,1 - 30,0	9,0 - 40,0	6,1 - 30,0
Dimensions								
A4	Length - total	mm	1390		1390		1390	
A5	Length - casing	mm	1035		1035		1035	
B2	Width	mm	670		670		670	
B3	Width	mm	585		585		585	
B1	Width	mm	1255		1255		1255	
C1	Height	mm	1595		1595		1595	
C2	Height	mm	1180		1180		1180	
D1	Diameter flue pipe	mm	150		150		150	
D2	Diameter flange BFP	mm	90		90		90	
E1	Minimal gap	mm	600		600		600	
E2	Minimal gap	mm	250 / (500)		250 / (500)		250 / (500)	
E3	Minimal gap	mm	150 / (500)		150 / (500)		150 / (500)	
E4	Minimal gap	mm	600		600		600	
E5	Minimal gap	mm	370		370		370	
	Installation dimensions / when dismantling parts - depth	mm	1210/110		1210/110		1210/110	
	Installation dimensions / when dismantling parts - width	mm	670/590		670/590		670/590	
	Installation dimensions / when dismantling parts - height	mm	1595/1570		1595/1570		1595/1570	
1	Connection flow		5/4“ IT	5/4“ IT	5/4“ IT	5/4“ IT	5/4“ IT	5/4“ IT
2	Sensor sleeve for safety heat exchanger		-	-	-	-	-	-
3	Safety heat exchanger connection		1/2“ ET	1/2“ ET	1/2“ ET	1/2“ ET	1/2“ ET	1/2“ ET
4/7	Bypass		5/4“ IT	5/4“ IT	5/4“ IT	5/4“ IT	5/4“ IT	5/4“ IT
5	Connection filling/draining		1/2“ IT	1/2“ IT	1/2“ IT	1/2“ IT	1/2“ IT	1/2“ IT
6	Connection return flow		5/4“ IT	5/4“ IT	5/4“ IT	5/4“ IT	5/4“ IT	5/4“ IT

IT Internal thread

ET External thread

Subject to technical modifications.

Illustration: Pellets burner right version (Conversion to the left possible on site)

The specified free area has to be strictly adhered to when carrying out maintenance and service work. It is recommended to leave a free area of at least 500 mm at either E2 or E3 to get behind the boiler.

TECHNICAL DATA

pelletfire 20/30/40

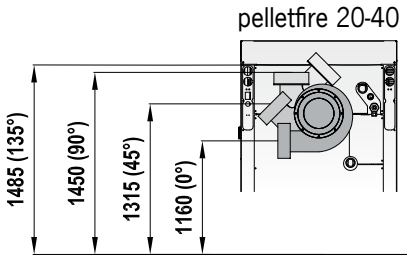

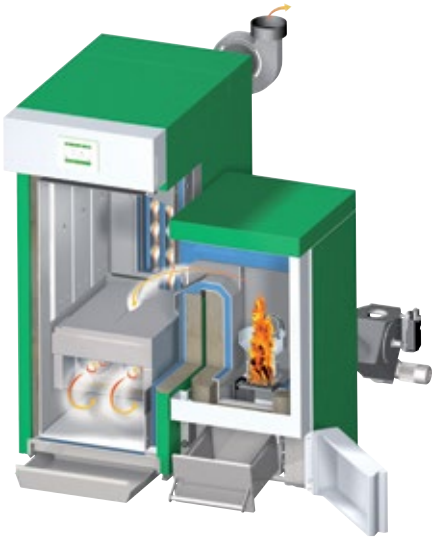

Technical data pelletfire		20/20		30/30		40/40	
		log wood	pellets	log wood	pellets	log wood	pellets
Boiler weight	kg	624,5	189	624,5	189	624,5	189
Content filling shaft firestar	ltr.	175		175		175	
Combustion efficiency ηF	%	>92	>90	>90	>91	>90	>91
Min./max. permissible feed pressure (overpressure)	Pa	5/20		5/20		5/20	
Max. permissible operating pressure	bar	3,0	3,0	3,0	3,0	3,0	3,0
Max. permissible flow temperature	°C	90	90	90	90	90	90
Water capacity	ltr.	108	29	108	29	108	29
Values at nominal load							
Flue gas temperature - log wood / pellets	°C	104,4	90,5	155,5	109-8	172,8	109,8
Flue gas mass flow rate log wood / pellets	kg/s	0,013	0,014	0,018	0,019	0,023	0,019
CO_2 content log wood / pellets	Vol. %	15,42	11,61	15,39	12,57	15,68	12,57
Values at part load							
Flue gas temperature - log wood / pellets	°C	77,7	59,7	77,7	59,7	77,7	59,7
Flue gas mass flow rate log wood / pellets	kg/s	0,006	0,006	0,006	0,006	0,006	0,006
CO_2 content log wood / pellets	Vol. %	13,54	8,82	13,54	8,82	13,54	8,82
Energy efficiency class							
Biomass boiler		A+	A+	A+	A+	A+	A+
Biomass boiler with integrated system controller		A+	A+	A+	A+	A+	A+

Subject to technical modifications.

8

TECHNICAL DATA

pelletstar 10/20/30/45/60

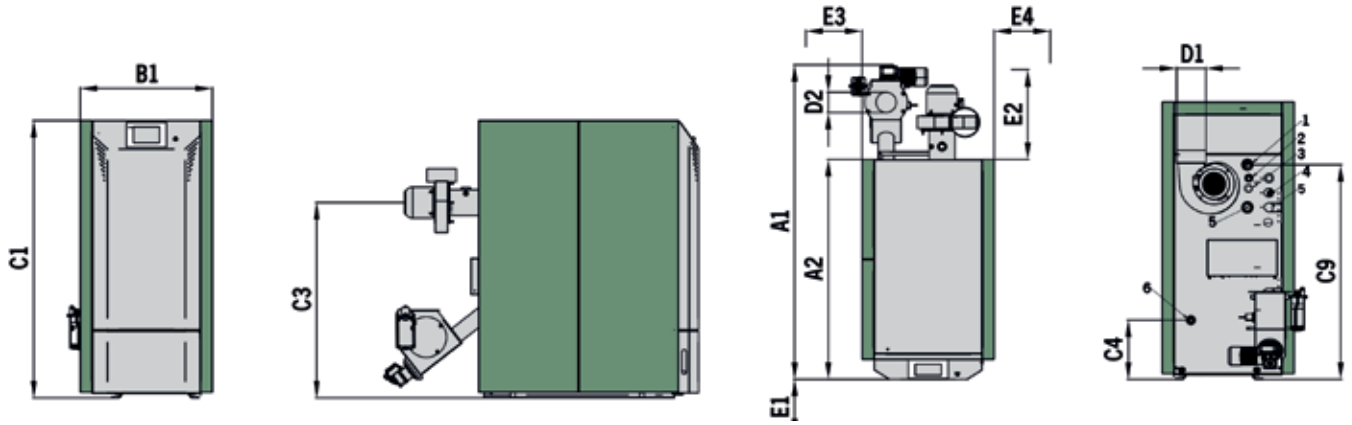

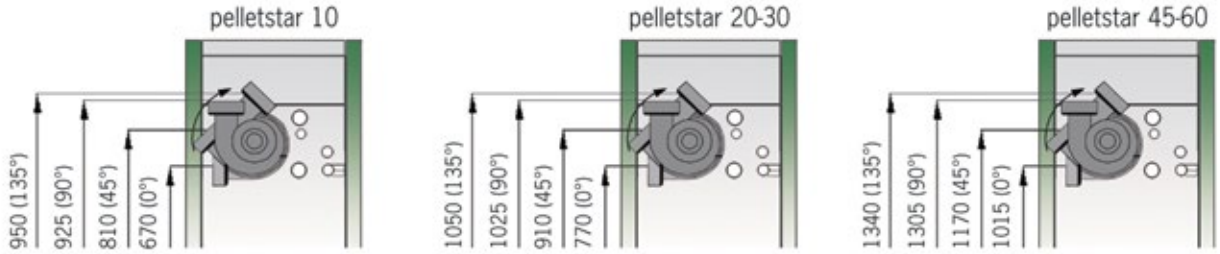

Technical data pelletstar			10	20	30	45	60
Output range		kW	3,5 - 12,0	6,1 - 20,0	6,1 - 30,0	13,0 - 45	13,0 - 60
Dimensions							
A1	Length - total	mm	1400	1400	1400	1620	1620
A2	Length - casing	mm	900	980	980	1140	1140
B1	Width	mm	590	590	590	750	750
C1	Height	mm	1135	1235	1235	1485	1485
C3	Height back-flow connection	mm	770	870	870	1135	1135
C4	Height flue pipe - centre	mm	265	265	265	265	265
C9	Height flow connection	mm	855	955	955	1200	1200
D1	Flue pipe - diameter	mm	130	130	130	150	150
D2	Diameter flange	mm	90	90	90	90	90
E1	Minimal gap	mm	750	750	750	750	750
E2	Minimal gap	mm	500	500	500	600	600
E3	Minimal gap	mm	750	750	750	750	750
E4	Minimal gap	mm	150	150	150	150	150
	Installation dimensions / when dismantling parts - depth	mm	865	940	940	1140	1140
	Installation dimensions / when dismantling parts - width	mm	590	590	590	750	750
	Installation dimensions / when dismantling parts - height	mm	1130	1230	1230	1480	1480
1	Connection flow		1“ IT	1“ IT	1“ IT	6/4“ IT	6/4“ IT
2	Thermowell for additional boiler sensor		1/2“ IT	1/2“ IT	1/2“ IT	1/2“ IT	1/2“ IT
3	Thermowell for thermal valve sensor		-	-	-	1/2“ IT	1/2“ IT
4	Safety heat exchanger input		-	-	-	1/2“ IT	1/2“ IT
5	Safety heat exchanger output		-	-	-	1/2“ IT	1/2“ IT
6	Connection back flow		1“ IT	1“ IT	1“ IT	6/4“ IT	6/4“ IT
7	Connection filling/draining		1/2“ IT	1/2“ IT	1/2“ IT	1/2“ IT	1/2“ IT
IT	Internal thread						Subject to technical modifications.

The specified free area has to be strictly adhered to when carrying out maintenance and service work. It is recommended to leave a free area of at least 500mm to get behind the boiler.

TECHNICAL DATA

pelletstar 10/20/30/45/60

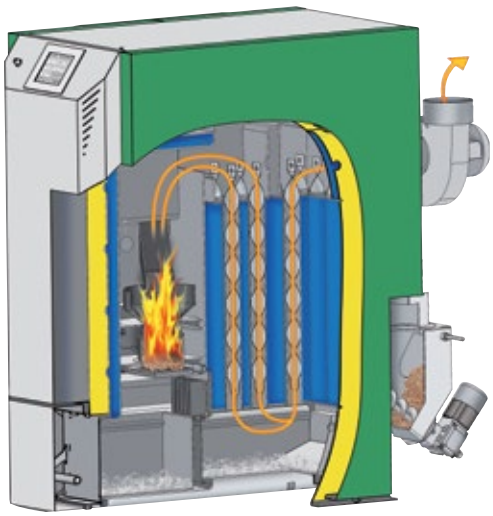

Technical data pelletstar		10	20	30	45	60
Boiler weight	kg	274	318	318	518	518
Combustion efficiency ηF	%	>90	>90	>90	>92	>92
Min./max. permissible feed pressure (overpressure)	Pa	5/10	5/10	5/10	5/10	5/10
Permissible operating pressure	bar	3,0	3,0	3,0	3,0	3,0
Max. permissible flow temperature	°C	95	95	95	95	95
Water capacity	ltr.	55	78	78	178	178
Values at nominal load						
Flue gas temperature	°C	65,5	59,7	59,7	60,0	60,0
Flue gas mass flow	kg/s	0,008	0,014	0,019	0,026	0,035
CO_2 content	Vol. %	11,71	11,61	12,57	15,50	14,60
Values at part load						
Flue gas temperature	°C	65,5	59,7	59,7	60,0	60,0
Flue gas mass flow	kg/s	0,003	0,006	0,006	0,010	0,010
CO_2 content	Vol. %	9,22	8,82	8,82	11,60	11,60
Energy efficiency class						
Biomass boiler		A+	A+	A+	A+	A+
Biomass boiler with integrated system controller		A+	A+	A+	A+	A+

Subject to technical modifications.

8

TECHNICAL DATA

pelletstar CONDENSATION 10/16/20/30/45/60

DISCHARGE SET SUCTION SYSTEM

Version A:

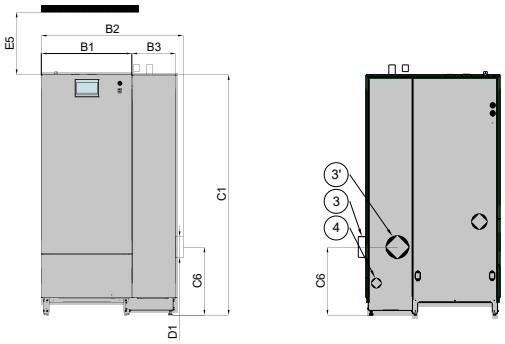

Version B:

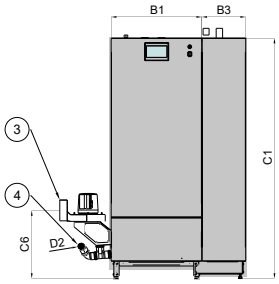

Version C:

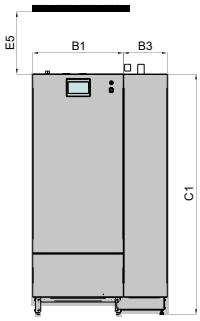

Version A:

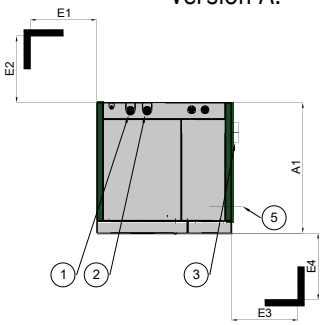

Version B:

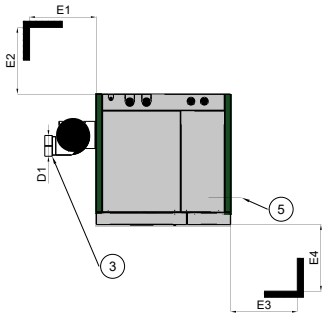

Version C:

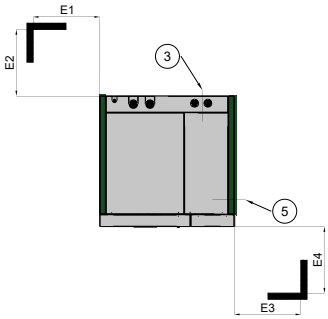

DISCHARGE SET HAND FILLING SYSTEM

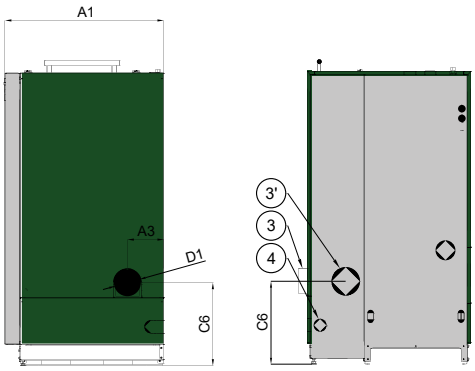

Version A:

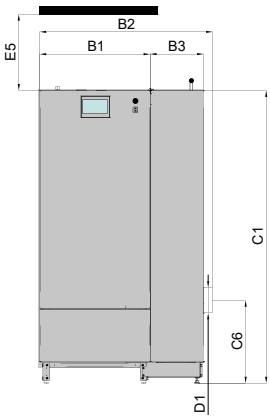

Version A:

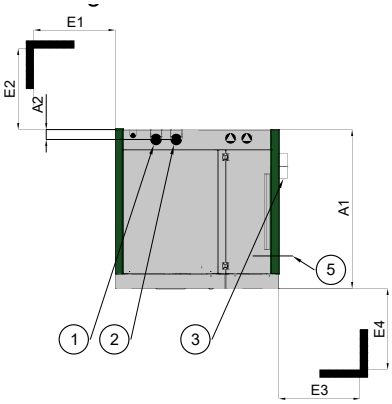

Version B:

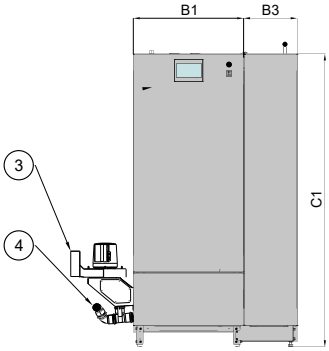

Version B:

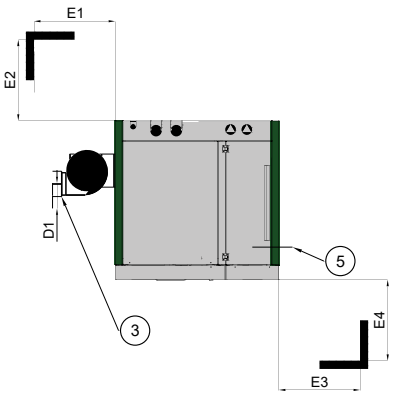

Version C:

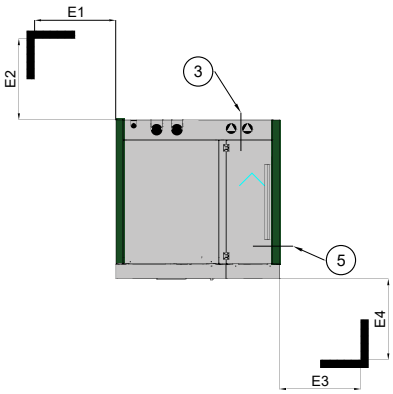

Subject to technical modifications.

TECHNICAL DATA

pelletstar CONDENSATION 10/16/20/30/45/60

DISCHARGE SET SCREW SYSTEM

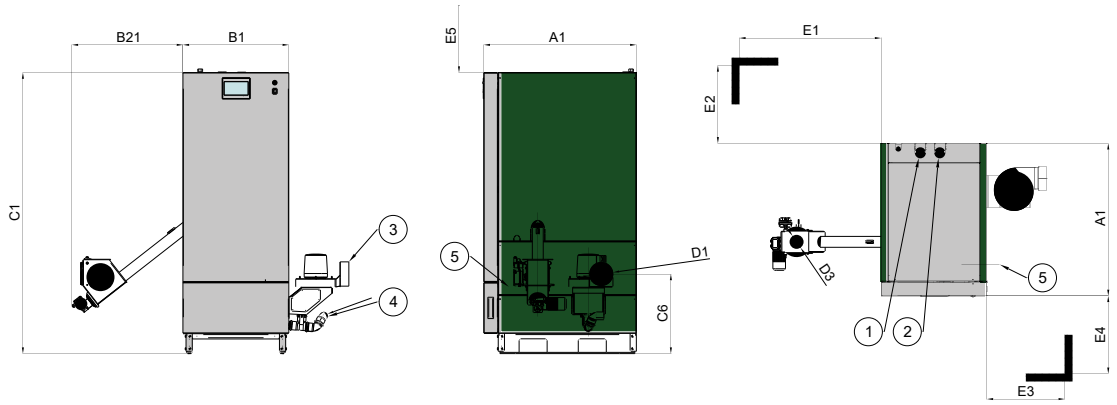

Version A:

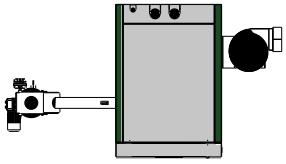

Version B:

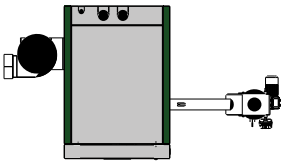

Version C:

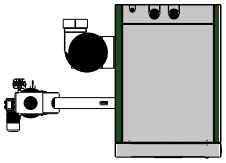

Version D:

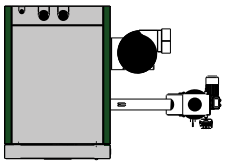

Technical data pelletstar CONDENSATION			10	16	20	30	45	60
Output range		kW	3,2-10,0	3,2-16,0	6,0-20,0	6,0-30,0	13,0-45,0	13,0-60,0
Dimensions								
A1	Length - total	mm	730	730	730	730	980	980
B1	Width basic boiler	mm	530	530	680	680	680	680
B2	Width total suction discharge system	mm	913	913	1063	1063	1066	1066
B2	Width total manual filling system	mm	913	913	1063	1063	1066	1066
B3	Width suction hopper	mm	330	330	330	330	330	330
B3	Width hand filling hopper	mm	330	330	330	300	330	330
B21	Width screw discharge system	mm	557	557	482	482	713	713
C1	Height	mm	1580	1580	1580	1580	1805	1805
C6	Height flue pipe - centre	mm	364	364	364	364	511	511
D1	Diameter flue pipe outlet	mm	Øi 132	Øi 132	Øi 132	Øi 132	Øi 152	Øi 152
D3	Diameter flange BFP	mm	90	90	-	-	90	90
E1	Minimal gap (A/B/C/D) screw discharge	mm	750/500/750/50		675/500/675/50		910/500/910/50	
E2	Minimal gap (A/B/C/D - A'/B'/C'/D') screw discharge	mm	50/50/ - /50 500'/500'/500'/500'		50/50/ - /50 500'/500'/500'/500'		50/50/50/50 500'/500'/500'/500'	
E3	Minimal gap (A/B/C/D) screw discharge	mm	500/750/50/750		500/675/50/675		500/910/50/910	
E1	Minimal gap (A/B/C) hand filling/suction discharge	mm	50/500/50		50/500/50		50/500/50	
E2	Minimal gap (A/B/C - B') hand filling/suction discharge	mm	50/50/500 - 500'		50/50/500 - 500'		50/50/500 - 500'	
E3	Minimal gap (A/B/C) hand filling/suction discharge	mm	500/50/50		500/50/50		500/50/50	
E4	Minimal gap	mm	750	750	750		750	
E5	Minimal gap		470	470	470		470	
	Inserting dimensions - depth	mm	730 (A1)	730 (A1)	730 (A1)		980 (A1)	
	Inserting dimensions - width	mm	530 (B1)	530 (B1)	680 (B1)		680 (B1)	
	Inserting dimensions - height	mm	1580 (C1)	1580 (C1)	1580 (C1)		1805 (C1)	
1	Connection flow		1" IT	1" IT	1" IT	1" IT	6/4" IT	6/4" IT
2	Connection back flow		1" IT	1" IT	1" IT	1" IT	6/4" IT	6/4" IT
3	Connection flue pipe		132 mm	132 mm	132 mm	132 mm	152 mm	152 mm
4	Condensation drain		DN50	DN50	DN50	DN50	DN50	DN50
5	Connection filling/draining (under the casing)		1/2" ET	1/2" ET	1/2" ET	1/2" ET	1/2" ET	1/2" ET

IT Internal thread

ET External htread

' Versions with flue pipe on the back side

Subject to technical modifications.

8

TECHNICAL DATA

pelletstar CONDENSATION 10/16/20/30/45/60

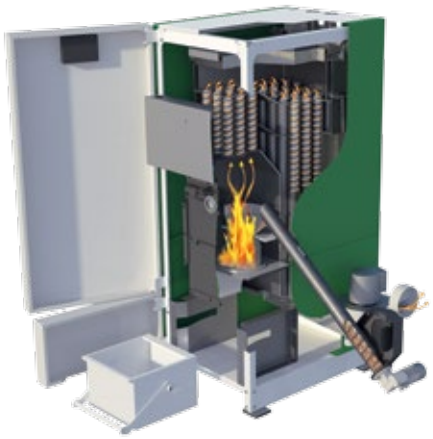

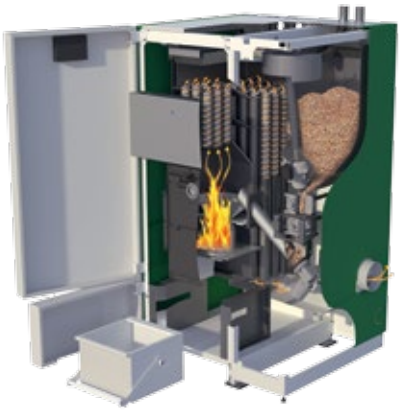

Technical data pelletstar CONDENSATION		10	16	20	30	45	60
Weight: Boiler basic set + completion set							
Version screw discharge system	kg	340	340	408	408	551	551
Version suction discharge system	kg	403	403	472	472	603	603
Version hand filling system	kg	385	385	470	470	601	601
Volume hand filling hopper	ltr.	106	106	106	106	150	150
Volume suction hopper	ltr.	56	56	56	56	87	87
Efficiency at ΔT=20K (50°C/30°C) [%] nominal load condensing operation pellets	%	<106	<106	<106	<106	<106	<106
Efficiency at ΔT=20K (50°C/30°C) [%] part load condensing operation pellets	%	>103	>103	>103	>103	>103	>103
Efficiency at ΔT=20K (80°C/60°C) [%] nominal load condensing operation pellets	%	>96	>95	>96	>96	>96	>96
Efficiency at ΔT=20K (80°C/60°C) [%] part load condensing operation pellets	%	>94	>94	>94	>94	>94	>94
Permissible excess operating overpressure (min./max.)	bar	1,5/3	1,5/3	1,5/3	1,5/3	1,5/3	1,5/3
Max. permissible operating temperature	°C	90	90	90	90	90	90
Min./max. permissible feed pressure (overpressure)	Pa	10/10	10/10	10/10	10/10	8/8	8/8
Water capacity	ltr.	57,5	57,5	77	77	135,0	135,0
Values at nominal load							
Flue gas temperature pellets ΔT=20K (50°C/30°C)	°C	30,0	32,0	31,5	32,9	30,5	33,0
Flue gas temperature pellets ΔT=20K (80°C/60°C)	°C	46,8	50,6	51,1	54,0	54,4	56,6
Mass flow flue gas: pellets ΔT=20K (50°C/30°C)	kg/h	21,6	35,0	39,5	55,2	84,5	115,8
Mass flow flue gas: pellets ΔT=20K (80°C/60°C)	kg/h	22,7	34,0	40,5	61,0	108,4	131,0
CO_2 content pellets ΔT=20K (50°C/30°C)	Vol. %	10,91	11,25	13,88	13,52	13,19	12,98
CO_2 content pellets ΔT=20K (80°C/60°C)	Vol. %	23,32	12,6	12,69	13,06	10,83	11,98
Values at part load							
Flue gas temperature pellets ΔT=20K (50°C/30°C)	°C	28,2	28,3	28,3	28,3	29,4	29,4
Flue gas temperature pellets ΔT=20K (80°C/60°C)	°C	43,3	43,3	43,0	43,0	44,7	44,7
Mass flow flue gas: pellets ΔT=20K (50°C/30°C)	kg/h	5,9	8,0	14,6	14,6	35,2	35,2
Mass flow flue gas: pellets ΔT=20K (80°C/60°C)	kg/h	7,6	7,6	14,8	14,8	34,8	34,9
CO_2 content pellets ΔT=20K (50°C/30°C)	Vol. %	10,40	10,43	10,60	10,60	10,05	10,05
CO_2 content pellets ΔT=20K (80°C/60°C)	Vol. %	10,93	10,93	10,25	10,25	10,04	10,04
Energy efficiency class							
Biomass boiler		A++	A++	A++	A++	A++	A++
Biomass boiler with integrated system controller		A++	A++	A++	A++	A++	A++

Subject to technical modifications.

NOTES

8

TECHNICAL DATA

pelletstar CONDENSATION 80/100/101

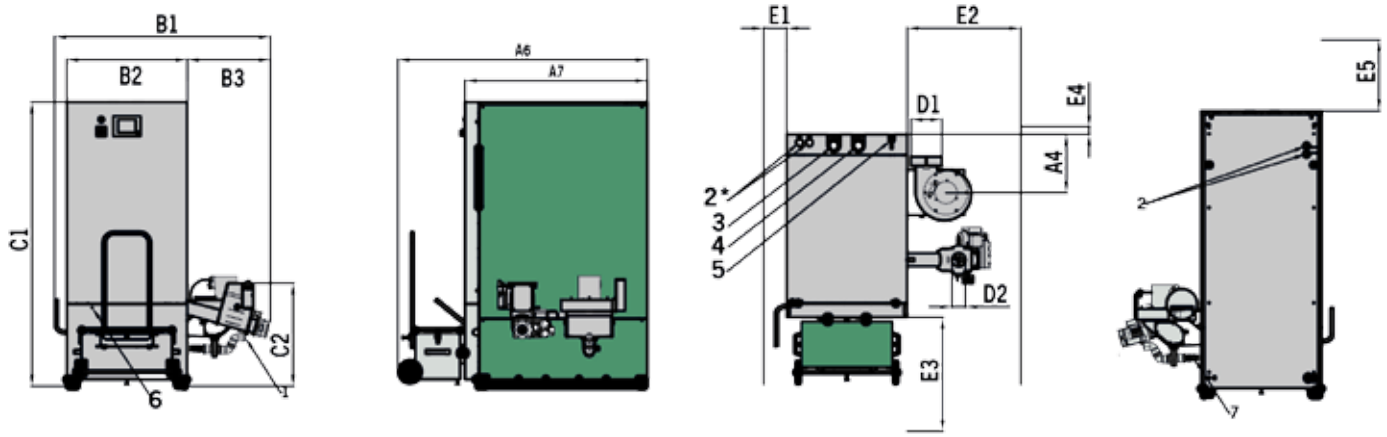

Technical data pelletstar CONDENSATION			80	100	101
Output range		kW	24 - 80	24 - 99	24 - 101
Dimensions					
A6	Length - total	mm	1645	1645	1645
A7	Length - casing	mm	1205	1205	1205
B1	Width - total	mm	1425	1425	1425
B2	Width - casing	mm	795	795	795
B3	Width	mm	550	550	550
C1	Height	mm	1870	1870	1870
D1	Diameter flue pipe outlet	mm	Øi 182	Øi 182	Øi 182
D2	Diameter flange BFP	mm	90	90	90
E1	Minimum space left	mm	150	150	150
E2	Minimal gap	mm	750	750	750
E3	Minimal gap	mm	750	750	750
E4	Minimal gap	mm	50	50	50
E5	Minimal gap	mm	470	470	470
	Inserting dimensions - depth	mm	1200	1200	1200
	Inserting dimensions - width	mm	800	800	800
	Inserting dimensions - height	mm	1900	1900	1900
1	Condensation drain		DN 50	DN 50	DN 50
2	Cable bushing		-	-	-
2*	Cable ducts (optional)		-	-	-
3	Connection flow		2“ IT	2“ IT	2“ IT
4	Connection back flow		2“ IT	2“ IT	2“ IT
5	Safety heat exchanger connection		1/2“ IT	1/2“ IT	1/2“ IT
6	Connection filling/draining		1/2“ ET	1/2“ ET	1/2“ ET
7	Connection cold water		3/4“ IT	3/4“ IT	3/4“ IT
IT	Internal thread				
ET	External thread				

Subject to technical modifications.

The specified free area has to be strictly adhered to when carrying out maintenance and service work.

TECHNICAL DATA

pelletstar CONDENSATION 80/100/101

Technical data pelletstar CONDENSATION		80	100	101
Boiler weight	kg	841	841	841
Efficiency at ΔT=20K (50°C/30°C) [%] nominal load condensing operation pellets	%	>103	>102	>102
Efficiency at ΔT=20K (50°C/30°C) [%] part load condensing operation pellets	%	>104	>104	>104
Efficiency at ΔT=20K (80°C/60°C) [%] nominal load condensing operation pellets	%	>97	>96	>96
Efficiency at ΔT=20K (80°C/60°C) [%] part load condensing operation pellets	%	>96	>96	>96
Min./max. permissible feed pressure (overpressure)	Pa	5/8	5/8	5/8
Permissible excess operating overpressure (min./max.)	bar	1,5/3	1,5/3	1,5/3
Max. permissible operating temperature	°C	95	95	95
Water capacity	ltr.	195	195	195
Values at nominal load				
Flue gas temperature pellets ΔT=20K (50°C/30°C)	°C	34	35	35
Flue gas temperature pellets ΔT=20K (80°C/60°C)	°C	61	63	63
Mass flow flue gas: pellets ΔT=20K (50°C/30°C)	kg/h	172	211	213
Mass flow flue gas: pellets ΔT=20K (80°C/60°C)	kg/h	192	224	226
CO_2 content pellets ΔT=20K (50°C/30°C)	Vol. %	12,1	11,9	11,9
CO_2 content pellets ΔT=20K (80°C/60°C)	Vol. %	11,5	11,9	11,9
Values at part load				
Flue gas temperature pellets ΔT=20K (50°C/30°C)	°C	30	30	30
Flue gas temperature pellets ΔT=20K (80°C/60°C)	°C	52	52	52
Mass flow flue gas: pellets ΔT=20K (50°C/30°C)	kg/h	55	55	55
Mass flow flue gas: pellets ΔT=20K (80°C/60°C)	kg/h	61	61	61
CO_2 content pellets ΔT=20K (50°C/30°C)	Vol. %	10,9	10,9	10,9
CO_2 content pellets ΔT=20K (80°C/60°C)	Vol. %	11,0	11,0	11,0

Subject to technical modifications.

8

TECHNICAL DATA

firematic CONDENSATION 30-40

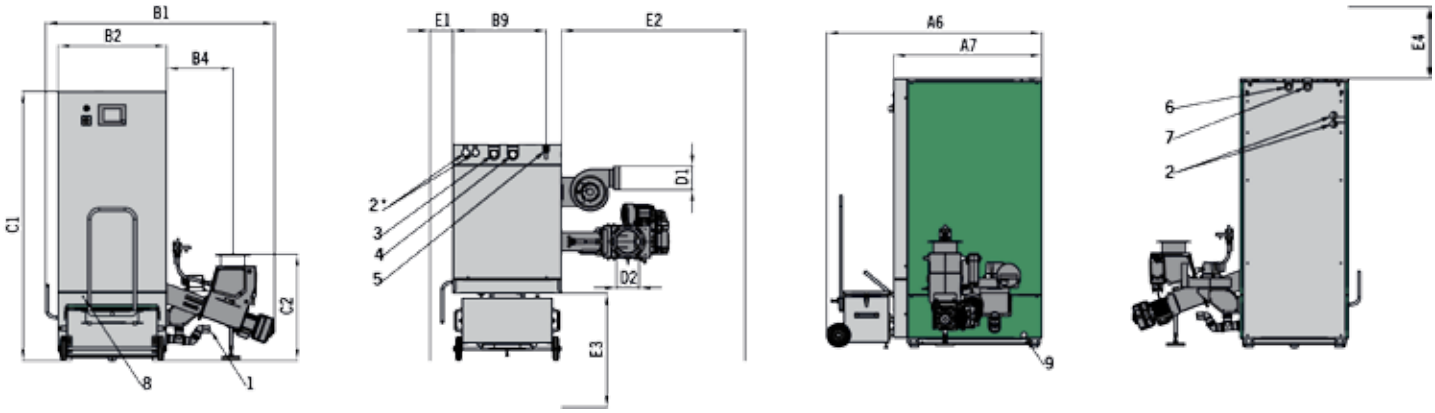

Technical data firematic CONDENSATION			30	40
Output range - wood chips		kW	9 - 30	9 - 40
Output range - pellets		kW	9 - 30	9 - 40
Dimensions				
A6	Length	mm	65	65
A7	Length	mm	40	40
B1	Width	mm	290	290
B2	Width	mm	440	440
B4	Width	mm	275	275
C1	Height	mm	205	205
C2	Height	mm	710	710
D1	Diameter flue pipe outlet	mm	150	150
E1	Minimal gap	mm	470	470
E2	Minimal gap	mm	750	750
E3	Minimal gap	mm	150	150
E4	Minimal gap	mm	1000	1000
	Inserting dimensions - depth	mm	975	975
	Inserting dimensions - width	mm	715	715
	Inserting dimensions - height	mm	1775	1775
1	Condensation drain		DN 50	DN 50
2	Cable bushing		Ø41	Ø41
2*	Cable ducts (optional)		Ø47	Ø47
3	Flow		6/4“ IT	6/4“ IT
3*	Flow option at the back		6/4“ IT	6/4“ IT
4	Back flow		6/4“ IT	6/4“ IT
4*	Return flow option at the back		6/4“ IT	6/4“ IT
5	Safety heat exchanger connection		1/2“ IT	1/2“ IT
IT	Internal thread			Subject to technical modifications.

The specified free area has to be strictly adhered to when carrying out maintenance and service work.

TECHNICAL DATA

firematic CONDENSATION 30-40

Technical data firematic CONDENSATION		30	40
Boiler weight	kg	682	
Efficiency at ΔT=20K (50°C/30°C) [%]* nominal load condensing operation wood chips/pellets	%	107/105,4	107/105,3
Efficiency at ΔT=20K (50°C/30°C) [%]* part load condensing operation wood chips/pellets	%	107/105,3	97,2/105,3
Efficiency at ΔT=20K (80°C/60°C) [%]* nominal load condensing operation wood chips/pellets	%	97/97,6	97,1/97,6
Efficiency at ΔT=20K (80°C/60°C) [%]* part load condensing operation wood chips/pellets	%	97,2/97,9	97,2/97,7
Min./max. permissible feed pressure (overpressure)	Pa	5/8	
Permissible excess operating overpressure (min./max.)	bar	1,5/3,0	
Max. boiler temperature	°C	95	
Water capacity	ltr.	135	
Values at nominal load			
Flue gas temperature wood chips/pellets ΔT=20K (50°C/30°C)	°C	31/29	32/30
Flue gas temperature wood chips/pellets ΔT=20K (80°C/60°C)	°C	48/43	54/47
Mass flow flue gas: wood chips/pellets ΔT=20K (50°C/30°C)	kg/s	0,017/0,016	0,023/0,021
Mass flow flue gas: wood chips/pellets ΔT=20K (80°C/60°C)	kg/s	0,018/0,017	0,025/0,023
CO_2 content wood chips/pellets ΔT=20K (50°C/30°C)	Vol. %	13,62/13,75	13,36/13,92
CO_2 content wood chips/pellets ΔT=20K (80°C/60°C)	Vol. %	13,39/13,82	13,26/13,91
Values at part load			
Flue gas temperature wood chips/pellets ΔT=20K (50°C/30°C)	°C	30/29	30/29
Flue gas temperature wood chips/pellets ΔT=20K (80°C/60°C)	°C	45/37	45/38
Mass flow flue gas: wood chips/pellets ΔT=20K (50°C/30°C)	kg/s	0,007/0,006	0,007/0,006
Mass flow flue gas: wood chips/pellets ΔT=20K (80°C/60°C)	kg/s	0,007/0,007	0,007/0,007
CO_2 content wood chips/pellets ΔT=20K (50°C/30°C)	Vol. %	10,43/11,54	10,43/11,54
CO_2 content wood chips/pellets ΔT=20K (80°C/60°C)	Vol. %	10,16/10,81	10,16/10,80
Energy efficiency class			
Biomass boiler		A++	A++
Biomass boiler with integrated system controller		A++	A++

8

Subject to technical modifications.

TECHNICAL DATA

firematic 20-101

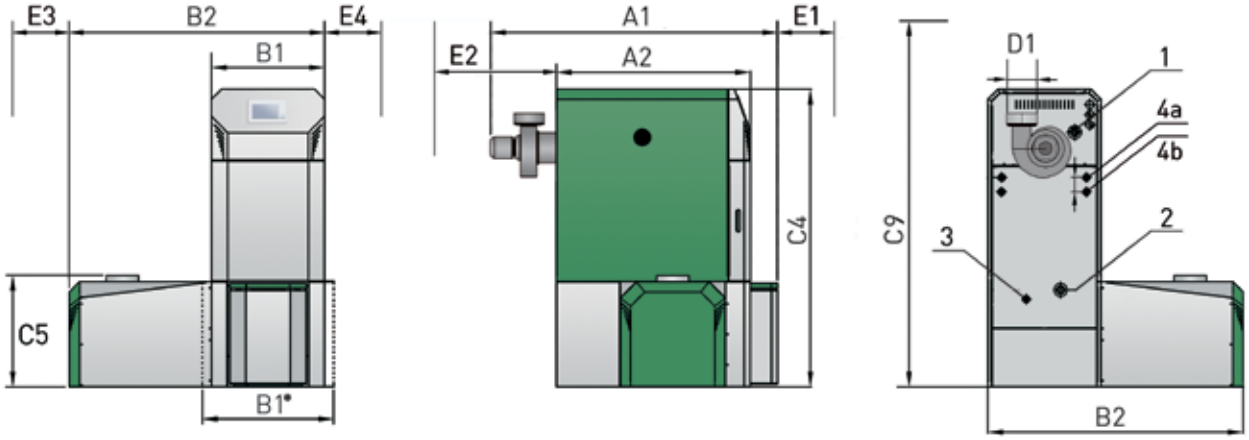

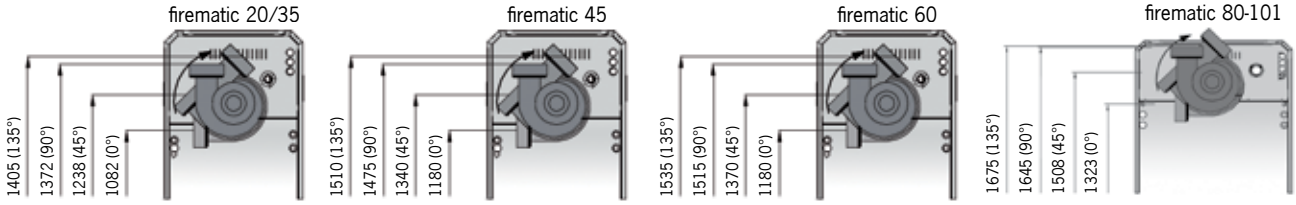

Technical data firematic			20	35	45	60	80	100	101
Output range - wood chips		kW	6,0 - 20	6,0 - 35	12,1 - 45	12,1 - 60	23,2 - 80	23,2 - 99	23,2 - 101
Output range - pellets		kW	5,9 - 20	5,9 - 35	12,6 - 45	12,6 - 60	23,2 - 80	23,2 - 99	23,2 - 101
Dimensions									
A1	Length - total	mm	1389	1389	1496	1496	1709	1709	1709
A2	Length - casing	mm	960	960	1070	1070	1178	1178	1178
B1	Width	mm	600	600	710	710	846	846	846
B1 *	Bring In wide with removal of components	mm	574	574	684	684	800	800	800
B1 *	Bring In wide with the casing (without casing removal)	mm	620	650	730	730	907	907	907
B2	Width – with insertion	mm	1300	1300	1410	1410	1636	1636	1636
C4	Height	mm	1490	1490	1590	1590	1690	1690	1690
C5	Delivery – upper edge	mm	645	645	645	645	645	645	645
C9	Minimum room height	mm	2100	2100	2300	2300	2115	2115	2115
D1	Flue pipe - diameter	mm	150	150	150	180	180	180	180
E1	Minimal gap	mm	600	600	700	700	800	800	800
E2	Minimal gap	mm	500	500	530	530	750	750	750
E3	Minimal gap	mm	300	300	300	300	300	300	300
E4	Minimal gap	mm	300	300	300	300	700	700	700
	Inserting dimensions - depth	mm	960	960	1070	1070	1178	1178	1178
	Inserting dimensions - width without insertion	mm	620	620	730	730	846	846	846
	Inserting dimensions - width without insertion and casing	mm	574	574	684	684	774	774	774
	Inserting dimensions - height	mm	1490	1490	1590	1590	1690	1690	1690
1	Connection flow		1“ IT	1“ IT	6/4“ IT	6/4“ IT	2“ IT	2“ IT	2“ IT
2	Connection back flow		1“ IT	1“ IT	6/4“ IT	6/4“ IT	2“ IT	2“ IT	2“ IT
3	Connection filling/draining		1/2“ IT	1/2“ IT	1/2“ IT	1/2“ IT	3/4“ IT	3/4“ IT	3/4“ IT
4a	Safety heat exchanger input		1/2“ IT	1/2“ IT	1/2“ IT	1/2“ IT	1/2“ IT	1/2“ IT	1/2“ IT
4b	Safety heat exchanger output		1/2“ IT	1/2“ IT	1/2“ IT	1/2“ IT	1/2“ IT	1/2“ IT	1/2“ IT
IT	Internal thread								

Subject to technical modifications.

The specified free area has to be strictly adhered to when carrying out maintenance and service work.

TECHNICAL DATA

firematic 20-101

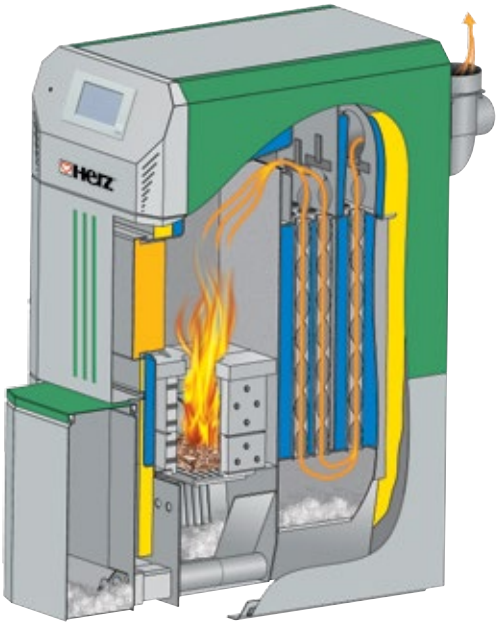

Technical data firematic		20	35	45	60	80	100	101
Boiler weight	kg	517	517	620	620	1140	1140	1140
Combustion efficiency ηF	%	>94	>93	>94	>94	>93	>93	>93
Min./max. permissible feed pressure (overpressure)	Pa	5/10	5/10	5/10	5/10	5/10	5/10	5/10
Max. operating pressure	bar	3,0	3,0	3,0	3,0	3,0	3,0	3,0
Max. permissible operating temperature	°C	95	95	95	95	95	95	95
Water capacity	ltr.	80	80	116	116	179	179	179
Values at nominal load								
Flue gas temperature wood chips (pellets)	°C	110 (110)	150 (150)	110 (110)	150 (150)	120 (120)	150 (150)	150 (150)
Mass flow flue gas: Wood chips (wood pellets)	kg/s	0,014 (0,012)	0,024 (0,022)	0,028 (0,027)	0,038 (0,035)	0,048 (0,046)	0,059 (0,059)	0,060 (0,059)
CO_2 content wood chips (pellets)	Vol. %	12,5 (13,07)	12,85 (12,79)	13,98 (13,64)	14,83 (13,98)	12,95 (13,70)	13,53 (13,36)	13,53 (13,36)
Values at part load								
Flue gas temperature wood chips (pellets)	°C	85 (85)	85 (85)	85 (85)	85 (85)	85 (85)	85 (85)	85 (85)
Mass flow flue gas: Wood chips (wood pellets)	kg/s	0,005 (0,005)	0,005 (0,005)	0,009 (0,009)	0,009 (0,009)	0,016 (0,016)	0,016 (0,016)	0,016 (0,016)
CO_2 content wood chips (pellets)	Vol. %	11, 97 (10,52)	11,97 (10,52)	12,79 (13,64)	12,79 (19,75)	11,60 (11,49)	11,49 (11,60)	11,49 (11,60)
Energy efficiency class								
Biomass boiler		A+	A+	A+	A+			
Biomass boiler with integrated system controller		A+	A+	A+	A+			

Subject to technical modifications.

8

TECHNICAL DATA

firematic 120-201

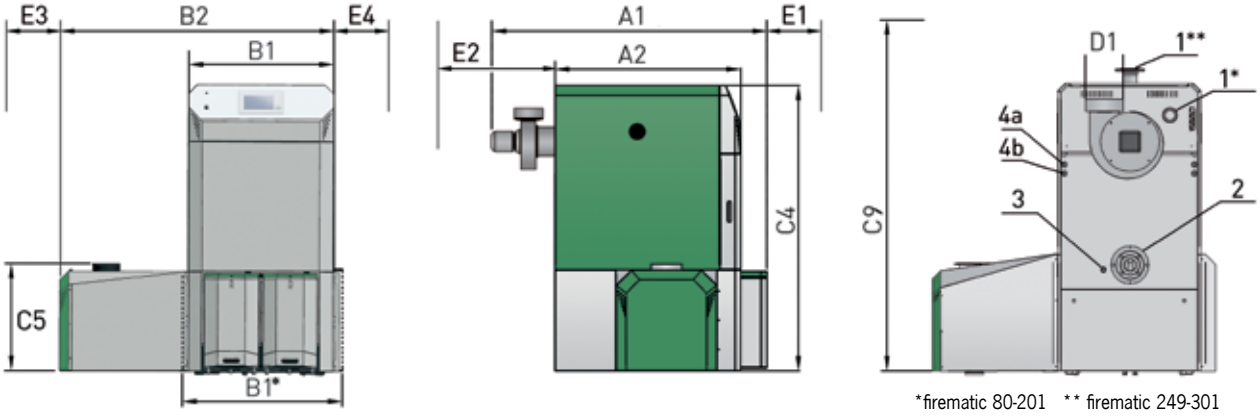

*firematic 80-201 ** firematic 249-301

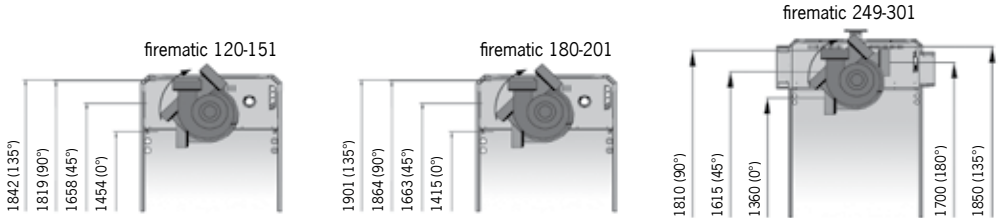

Technical data firematic			120	130	149	151	180	199	201
Output range - wood chips		kW	35,1 - 120	35,1 - 130	35,1 - 149	35,1 - 151	35,1 - 180	35,1 - 199	35,1 - 201
Output range - pellets		kW	34,8 - 120	34,8 - 130	34,8 - 149	34,8 - 151	34,8 - 180	34,8 - 199	34,8 - 201
Dimensions									
A1	Length - total	mm	2088	2088	2088	2088	2246	2246	2246
A2	Length - casing	mm	1504	1504	1504	1504	1504	1504	1504
B1	Width	mm	982	982	982	982	982	982	982
B1*	Bring In wide with removal of components	mm	950	950	950	950	950	950	950
B1*	Bring In wide with the casing (without casing removal)	mm	1024	1024	1024	1024	1024	1024	1024
B2	Width – with insertion	mm	1908	1908	1908	1908	1908	1908	1908
C4	Height	mm	1825	1825	1825	1825	1825	1825	1825
C5	Delivery – upper edge	mm	762	762	762	762	762	762	762
C9	Minimum room height	mm	2420	2420	2420	2420	2420	2420	2420
D1	Flue pipe - diameter	mm	200	200	200	200	200	200	200
E1	Minimum space at the front	mm	750	750	750	750	750	750	750
E2	Minimum space at the back	mm	750	750	750	750	750	750	750
E3	Minimum space left	mm	300	300	300	300	300	300	300
E4	Minimum space right	mm	700	700	700	700	700	700	700
	Inserting dimensions - depth	mm	1504	1504	1504	1504	1504	1504	1504
	Inserting dimensions - width without insertion	mm	1087	1087	1087	1087	1087	1087	1087
	Inserting dimensions - width without insertion and casing	mm	912	912	912	912	912	912	912
	Inserting dimensions - height	mm	1825	1825	1825	1825	1825	1825	1825
1	Connection flow		2“ IT	2“ IT	2“ IT	2“ IT	2“ IT	2“ IT	2“ IT
2	Connection back flow		2“ IT	2“ IT	2“ IT	2“ IT	2“ IT	2“ IT	2“ IT
3	Connection filling/draining		3/4“ IT	3/4“ IT	3/4“ IT	3/4“ IT	3/4“ IT	3/4“ IT	3/4“ IT
4a	Safety heat exchanger input		1/2“ IT	1/2“ IT	1/2“ IT	1/2“ IT	1/2“ IT	1/2“ IT	1/2“ IT
4b	Safety heat exchanger output		1/2“ IT	1/2“ IT	1/2“ IT	1/2“ IT	1/2“ IT	1/2“ IT	1/2“ IT
IT	Internal thread								

Subject to technical modifications.

The specified free area has to be strictly adhered to when carrying out maintenance and service work.

TECHNICAL DATA

firematic 120-201

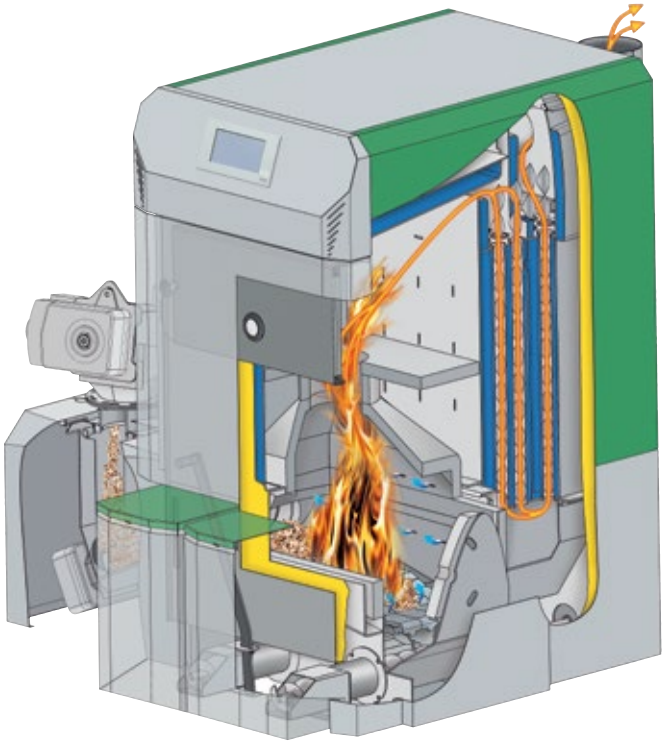

Technical data firematic		120	130	149	151	180	199	201
Boiler weight	kg	1570	1570	1570	1570	1570	1570	1570
Combustion efficiency ηF	%	>93	>93	>94	>94	>93	>93	>93
Min./max. permissible feed pressure (overpressure)	Pa	5/10	5/10	5/10	5/10	5/10	5/10	5/10
Max. operating pressure	bar	5,0	5,0	5,0	5,0	5,0	5,0	5,0
Max. permissible operating temperature	°C	95	95	95	95	95	95	95
Water capacity	ltr.	295	295	295	295	295	295	295
Values at nominal load								
Flue gas temperature wood chips (pellets)	°C	140 (140)	140 (140)	160 (160)	160 (160)	180 (180)	180 (180)	180 (180)
Mass flow flue gas: Wood chips (wood pellets)	kg/s	0,071 (0,069)	0,083 (0,077)	0,092 (0,087)	0,092 (0,088)	0,114 (0,108)	0,125 (0,117)	0,127 (0,118)
CO_2 content wood chips (pellets)	Vol. %	13,06 (13,32)	13,06 (13,32)	14,16 (14,54)	14,16 (14,54)	14,10 (14,33)	14,21 (14,75)	14,21 (14,75)
Values at part load								
Flue gas temperature	°C	85 (85)	85 (85)	85 (85)	85 (85)	85 (85)	85 (85)	85 (85)
Mass flow flue gas: Wood chips (wood pellets)	kg/s	0,024 (0,026)	0,037 (0,022)	0,024 (0,023)	0,024 (0,023)	0,024 (0,023)	0,024 (0,023)	0,024 (0,023)
CO_2 content	Vol. %	12,20 (12,25)	12,20 (12,25)	12,20 (12,25)	12,20 (12,25)	12,20 (12,25)	12,20 (12,25)	12,20 (12,25)

Subject to technical modifications.

TECHNICAL DATA

firematic PELLET 120-201

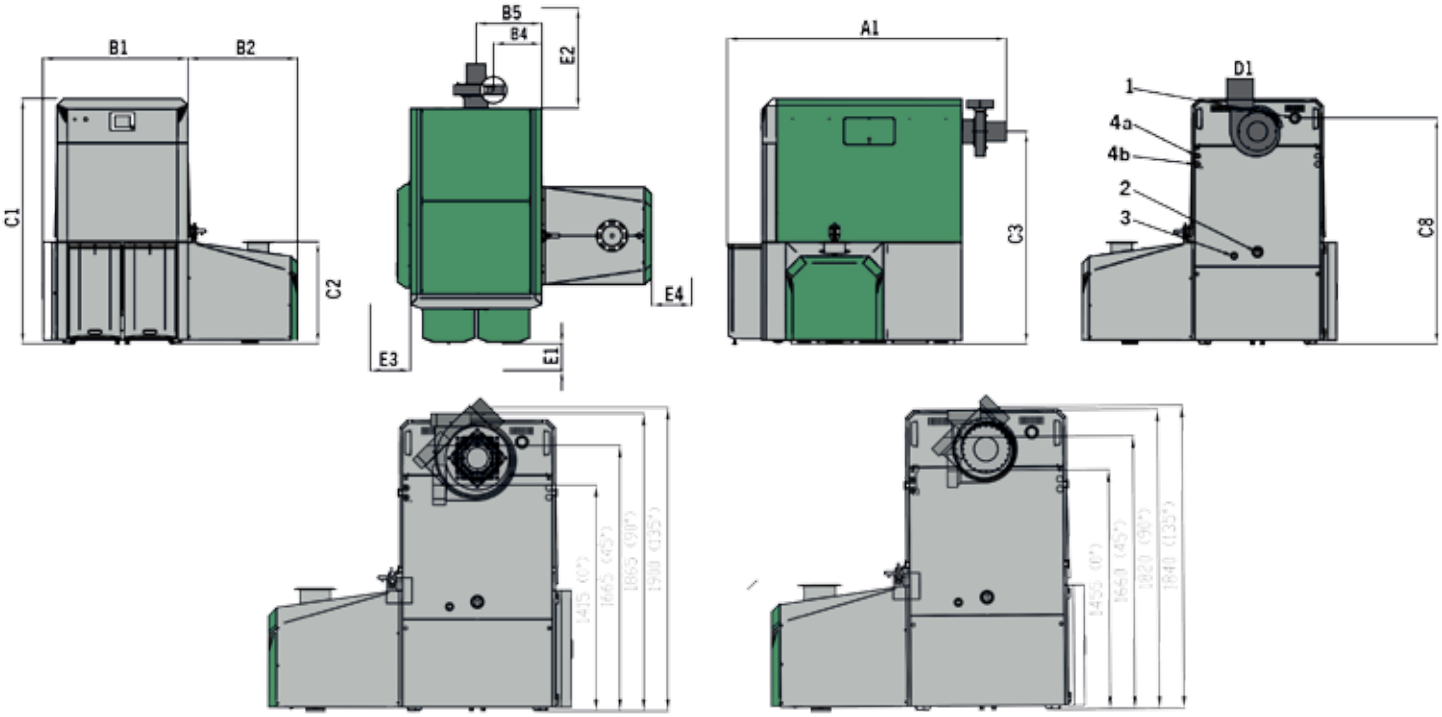

Technical data firematic PELLET			120	149	151	180	199	201
Output range - wood chips		kW	36,7 - 120	36,7 - 149	36,7 - 151	36,7 - 180	-	-
Output range - pellets		kW	35,9 - 120	35,9 - 149	35,9 - 151	35,9 - 180	35,9 - 199	35,9 - 201
Dimensions								
A1	Length - total	mm	2090	2090	2090	2250	2250	2250
B1	Width	mm	1085	1085	1085	1085	1085	1085
B2	Width with insertion	mm	820	820	820	820	820	820
B5	Width flue pipe - centre	mm	490	490	490	490	490	490
C1	Height	mm	1825	1825	1825	1825	1825	1825
C1	Height	mm	1825	1825	1825	1825	1825	1825
C2	Height insertion	mm	760	760	760	760	760	760
C3	Height flue pipe - centre	mm	1585	1585	1585	1585	1585	1585
C8	Height flow connection	mm	1685	1685	1685	1685	1685	1685
D1	Flue pipe - diameter	mm	200	200	200	200	200	200
E1	Minimal gap	mm	750	750	750	750	750	750
E2	Minimal gap	mm	750	750	750	750	750	750
E3	Minimal gap	mm	300	300	300	300	300	300
E4	Minimal gap	mm	700	700	700	700	700	700
	Inserting dimensions - depth	mm	1504	1504	1504	1504	1504	1504
	Inserting dimensions - width without insertion	mm	1087	1087	1087	1087	1087	1087
	Inserting dimensions - width without insertion and casing	mm	912	912	912	912	912	912
	Inserting dimensions - height	mm	1825	1825	1825	1825	1825	1825
1	Connection flow		2“ IT	2“ IT	2“ IT	2“ IT	2“ IT	2“ IT
2	Connection back flow		2“ IT	2“ IT	2“ IT	2“ IT	2“ IT	2“ IT
3	Connection filling/draining		3/4“ IT	3/4“ IT	3/4“ IT	3/4“ IT	3/4“ IT	3/4“ IT
4a	Safety heat exchanger input		1/2“ IT	1/2“ IT	1/2“ IT	1/2“ IT	1/2“ IT	1/2“ IT
4b	Safety heat exchanger output		1/2“ IT	1/2“ IT	1/2“ IT	1/2“ IT	1/2“ IT	1/2“ IT
IT	Internal thread							

Subject to technical modifications.

The specified free area has to be strictly adhered to when carrying out maintenance and service work.

TECHNICAL DATA

firematic PELLET 120-201

Technical data firematic PELLET		120	149	151	180	199	201
Boiler weight	kg	1445	1445	1445	1445	1445	1445
Combustion efficiency ηF	%	>93	>94	>94	>93	>93	>93
Min./max. permissible feed pressure (overpressure)	Pa	5/10	5/10	5/10	5/10	5/10	5/10
Max. operating pressure	bar	5,0	5,0	5,0	5,0	5,0	5,0
Max. Operating temperature	°C	95	95	95	95	95	95
Water capacity	ltr.	295	295	295	295	295	295
Values at nominal load							
Flue gas temperature wood chips (pellets)	°C	140 (140)	140 (140)	160 (160)	160 (160)	- (180)	- (180)
Mass flow flue gas: Wood chips (wood pellets)	kg/s	0,083 (0,077)	0,092 (0,087)	0,092 (0,088)	0,114 (0,108)	- (0,117)	- (0,118)
CO_2 content wood chips (pellets)	Vol. %	13,06 (13,32)	14,16 (14,54)	14,16 (14,54)	14,10 (14,33)	- (14,75)	- (14,75)
Values at part load							
Flue gas temperature	°C	85 (85)	85 (85)	85 (85)	85 (85)	- (85)	- (85)
Mass flow flue gas: Wood chips (wood pellets)	kg/s	0,037 (0,022)	0,024 (0,023)	0,024 (0,023)	0,024 (0,023)	- (0,023)	- (0,023)
CO_2 content	Vol. %	12,20 (12,25)	12,20 (12,25)	12,20 (12,25)	12,20 (12,25)	- (12,25)	- (12,25)

Subject to technical modifications.

8

GENERAL TERMS AND CONDITIONS OF BUSINESS AND DELIVERY HERZ ENERGIETECHNIK GMBH

1. General information
The following General Terms and Conditions apply to all quotes, contracts, deliveries, assemblies, maintenance and all services, etc. provided by HERZ to its customers. Different agreements or side agreements of terms and conditions of the buyer shall only become valid if they are confirmed in writing by HERZ.

2. The quote
Quotes from HERZ are subject to alteration and non-binding, unless they are expressly labelled as binding in the quote text. Changes to the goods or to the design as a result of technical developments are reserved. The weights, dimensions and technical specifications stated for HERZ products are non-binding. All technical documents - also in electronic form - including all images and brochures, shall remain the property of HERZ and shall remain its copyright. Any use, notably forwarding, reproduction and publication, shall require the express consent of HERZ.

3. Prices
Unless agreed in writing, prices are net ex works (EXW Incoterms 2000) without packaging and without discount. They are only guide prices. If there are increases in material costs between conclusion of the contract and performance as a result of recommendations from a joint commission or due to changes in global market prices for raw materials or cost prices or additional work and additional costs caused by circumstances not in the contractor's sphere of influence, HERZ reserves the right to adjust the prices. This does not apply if there are fewer than 3 months between conclusion of the contract and performance. If delivery free site is agreed, this means access is via an easily accessible road but without unloading the delivered goods. Additional services and deliveries shall be billed separately. For goods delivered ex works Incoterms 2010, these are deemed to be accepted.
Services, including training and instruction for employees of the contractual partner, shall be charged according to the applicable services price list.

4. Entering into a contract
4.1 A contract is deemed concluded when HERZ, after receiving an order, sends a written order confirmation or if the goods are delivered to the purchase directly after receipt of order. In the latter case, the invoice is simultaneously the order confirmation.

4.2 Side agreements and changes or supplements requested by the purchase after conclusion of a contract require written confirmation from HERZ in order to be valid. All changes after entering into a contract, which are made upon request from the purchaser or costs incurred by HERZ as a result of cancellation, shall be borne by the purchaser. HERZ is free to reject orders without stating grounds. If prepayments have been made in the meantime, these shall be refunded.

5. Performance periods and deadlines
5.1 Performance periods, which are not expressly designated as binding, are non-binding.

5.2 Compliance with an agreed performance period requires all commercial and technical questions to be clarified between the contractual parties and for the ordering party to have fulfilled all its obligations. If this is not the case, the performance period shall be extended appropriately. A performance period is complied with if the shipment is ready for shipping within the period and this has been advised to the purchaser. If acceptance has to be performed, the acceptance date shall apply, alternatively the notification from HERZ of readiness for acceptance.

5.3 Before the end of the performance period, HERZ reserves the right to make partial deliveries and submit partial invoices to a reasonable extent.

5.4 Compliance with the performance deadline is subject to correct and timely self-delivery. HERZ shall report any obviously developing delays.

5.5 If non-compliance is due to force majeure, labour disputes, delays in receiving state approvals or other events outside HERZ's sphere of influence, the delivery period shall be extended accordingly. This shall also apply if HERZ is in arrears with provision of the work and services. Any obviously developing delays in the provision of work and services shall be reported.

5.6 If there are delays to the assembly or commissioning or delays to subsequent trades or work by other companies that are longer as a result of delivery delays, partial deliveries, longer than envisaged assembly times, or similar, claims for compensation against Herz are excluded unless the delays are due to malice or gross negligence.

6. Delivery period
6.1 Delivery dates are always non-binding unless a fixed date has been expressly agreed in writing. A delayed delivery shall not entitle the purchaser to assert claims for compensation or to withdraw from the contract. Nevertheless, HERZ shall take all measures in order to fulfil the desired dates of its customers.

6.2 In the event of delayed delivery, the purchase only reserves the right of withdrawal after a reasonable subsequent deadline set by it has passed.

6.3 The delivery time is deemed to be interrupted for the duration of circumstances, which cannot be influenced by HERZ or by suppliers to HERZ: e.g. Difficulties in procuring raw materials, business interruption, strikes or lockouts, and all cases of force majeure.

6.4 If the grounds for delays as listed in No. 5.3 last longer than 12 weeks, both HERZ and the purchaser reserve the right to withdraw from the contract without stating further reasons.

6.5 If goods manufactured on time are not transferred to the purchaser at the agreed location or on the contractually agreed date, HERZ can store the goods at the purchaser's costs and risk. The purchaser's obligation to pay the purchase price shall remain unaffected. In addition, HERZ reserves the right to present the invoice.

6.6 HERZ reserves the right to make partial and advance deliveries.

6.7 In the case of a delay to the work and services or of an interruption, which are caused by the purchaser, the purchaser shall bear all additional costs incurred as a result of the delay or interruption, and HERZ can submit partial invoices for its work and costs. Delivery of the HERZ products - as represented in the price table - shall generally be within the usual market and industry packaging. The goods are insured against transport damage, transport losses or breakage only upon written request from the purchaser and at its cost. If there are delays to the assembly or commissioning or delays to subsequent trades or work by other companies that are longer as a result of delivery delays, partial deliveries, longer than envisaged assembly times, or similar, claims for compensation against HERZ are excluded unless the delays are due to malice or gross negligence. Unless the delay is due to malice or gross only by HERZ but not by its suppliers.

7. Delivery, transport and transfer of risk
7.1 Risk, including risk of seizure, for whatever reason, shall transfer to the purchaser with handover of the goods to the haulier or freight carrier, but not later than upon leaving the HERZ plant. If the shipment is delayed due to conduct by the purchaser or as a result of circumstances that HERZ is not responsible for, risk shall transfer to the purchaser upon notification of readiness for shipping.
For delivery with installation and assembly, risk shall transfer on the date the plant is handed over or, if agreed, after completion of the test operation.

7.2 Delivery of the Herz products - as represented in the price table - shall generally be within the usual market and industry packaging.

7.3 The goods are insured against transport damage, transport losses or breakage only upon written request from the customer and at its cost.

7.4 If delivery free site is agreed, access to the unloading site must be possible for a 40-tonne truck, but without unloading the delivered goods. Exceptions shall be agreed in writing.

7.5 The delivery time is deemed to be interrupted for the duration of circumstances, which cannot be influenced by HERZ or by suppliers to HERZ: e.g. Difficulties in procuring raw materials, business interruption, strikes or lockouts, and all cases of force majeure.

7.6 If the grounds for delays as listed in No. 7.3 last longer than 12 weeks, both HERZ and the contractual partner reserve the right to withdraw from the contract without stating further reasons.

7.7. The vendor reserves the right to make partial and advance deliveries.

7.8 In the case of a delay to the work and services or of an interruption, which are caused by the purchaser, the purchaser shall bear all additional costs incurred as a result of the delay or interruption, and HERZ can submit partial invoices for its work and costs. Delivery of the Herz products as represented in the price table shall be as agreed under No. 6. If there are delays during assembly or commissioning or if there are delays to subsequent trades or work from other companies, the agreements as agreed in No. 5.6 shall apply.

8. With drawal from the contract
Upon withdrawal from the contract (sales order), for which the purchaser exclusively is responsible and which is a case according to Nos. 5.3 and 5.4, it is agreed that in this case the purchaser shall pay a cancellation fee of 20 % of the order value as compensation.

9. Payments
Unless agreed otherwise, all payments shall payable and therefore due within 30 days of delivery by bank transfer into the HERZ bank account or in cash, free of expenses and without deduction. Fees for collection or discount shall be charged to the purchaser. The purchaser is required to pay the respective purchase price in full. The offsetting with counter-claims or retention of payments by the purchaser for whatever reason are not permitted without express agreement, unless the purchaser's claim has been acknowledged in writing by Herz or has been legally upheld. Other payment agreements must be in writing.

10. Dunning and debt collection costs
The purchaser shall pay default interest at the rate of 8 percentage points above the respective base rate if a payment date is missed or date is lost. In the case of default and after unsuccessful dunning twice by HERZ, the purchaser is required to reimburse the costs dunning costs, intervention costs and the costs for debt collection and involvement of the lawyers in addition to the default interest. Warranty claims asserted by the purchaser shall not entitle it to withhold agreed payments. HERZ reserves the right to offset payments made by the purchaser against debt collection costs incurred, payments may also be offset against older debts even in the event of different allocation by the purchaser. Contradictory instructions, for example on the payment documents, are invalid.

11. Loss of date
In the event of default, HERZ reserves the right to withdraw from the contract. In the event of withdrawal from the contract. The purchaser shall pay a reasonable fee for use of the contractual goods until the actual retraction.

12. Shipping and handover conditions
Immediately after receiving the goods at the agreed destination, the purchaser shall inspect and accept them or have then invested and accepted by authorised persons. If the purchaser expressly or tacitly waives the inspection, the purchased object is deemed to have been delivered correctly and accepted. Shipping shall be at the purchaser's account and cost, the purchaser's conditions regarding the method and route of shipping are not binding for HERZ and HERZ reserves the right of selection. HERZ reserves the right but is not required to insure deliveries against normal transport risks in the name of an on account of the purchaser. Risk, including risk of seizure, for whatever reason, shall transfer to the purchaser with handover of the goods to the haulier or freight carrier, but not later than upon leaving the HERZ plant.
Upon handover of the goods ordered by the purchaser to the carrier (post office, railway or haulier), HERZ has fulfilled its contractual obligations and risk shall transfer to the purchaser. The sales costs of HERZ do not include costs for delivery, assembly and installation.
If delivery is made by HERZ, risk shall transfer on the date of handover of the plant.

13. Retention of title
13.1. HERZ shall retain ownership of all goods delivered by it until full payment. The purchaser shall preserve the value of the conditional goods and shall immediately inform HERZ in the event that claims are asserted by third parties regarding HERZ property. The purchaser shall inform its customers that all goods supplied by HERZ are subject to retention of title and that it therefore cannot transfer ownership to its customers before full payment of the debts to HERZ.

13.2 If the goods are supplied directly by the purchaser to third parties, the purchaser shall be entitled to compensation. For this reason, the purchaser herewith assigns all claims and incidental claims against third parties from such sales to HERZ and shall declare this advance assignment for the purchase price demands for the conditional goods in its accounts. The claim up to the amount of the outstanding invoice amount is assigned, for current business relationships at the amount of the balance plus default interest. In the case of resale, the purchaser is liable until full payment of all demands by HERZ for all goods and services provided to it, also in the event of fire, theft or other damage.

13.3. Pledging or assigning of conditional goods or of the assigned claim is not permitted.

13.4. The purchaser shall fulfil the necessary formal provisions regarding safeguarding the retention of title before handover to a third party by correspondingly labelling the property of HERZ. In the event of seizure or other claim of the contractual object, the purchase shall point out HERZ's property rights and shall immediately inform HERZ by registered letter.

13.5. Any claims by the purchaser against an insurer in respect of HERZ goods not yet fully paid for are hereby assigned to HERZ within the limits of s. 15 VersVG.

13.6. In the event of processing, combining and mixing of plant parts, devices, fittings, etc. subject to retention of title, HERZ shall be entitled to joint ownership of the new items, namely in the same ratio as the invoice value of the conditional goods to the invoice value of the other goods, whereby he costs for processing shall be added to this invoice value.

14. Product liability and claims for compensation
14.1. In the event of injury to life, limb or health, which is due to a negligent breach of duty by HERZ or a culpable or negligent breach of duty by one of its statutory representatives or vicarious agents, HERZ shall be liable in accordance with the statutory conditions.

The following applies to other damages:
a) For damages caused by a grossly negligent breach of duty by HERZ or culpable or grossly negligent breach of duty by one of its statutory representatives or vicarious agents, HERZ shall be liable in accordance with the statutory conditions.
b) HERZ's liability for damages due to a breach of material contractual duties resulting from slight negligence by HERZ is restricted to the foreseeable, contractually typical damage up to a maximum of 100% of the net purchase price.
c) Claims for compensation for other damage due to a breach of secondary duties or immaterial duties in the case of slight negligence are excluded.
d) Claims for compensation from default, which are due to slight negligence, are excluded; the purchaser's statutory rights after expiration of a reasonable additional period shall remain unaffected.

GENERAL TERMS AND CONDITIONS OF BUSINESS AND DELIVERY HERZ ENERGIETECHNIK GMBH

e) The liability exclusions or restrictions shall not apply if HERZ maliciously concealed a defect or has assumed a warranty for the condition of the object.
f) The purchaser's claim for replacement if any costs incurred in vain rather than compensation instead of performance shall remain unaffected.

14.2. HERZ is not liable for indirect damages resulting from a defective delivery, e.g. loss of production, increased production costs, lost profits and increased material consumption, except in the cases of malice or gross negligence.

14.3. Any regress claims, which the purchaser or third parties direct against HERZ from the product liability as defined in the Product Liability Act (Produkthaftungsgesetz - PHG), are also excluded. Unless the party entitled to recourse proves that the fault was caused culpably by HERZ or at least grossly negligently.

14.4. Insofar as the purchaser proves corresponding damage, claims for compensation due to non-performance are restricted to the amount of 20% of the value of the part of the delivery or service affected by impossibility or default. No liability is assumed if equipment or installations of the purchaser or its customers are defective as a result of integration of the defect-free goods.

15. Warranty claims and complaints due to defects
15.1. The statutory conditions and deadline for moveables shall apply to these. The warranty only applies to defects that occurred despite compliance with the operating instructions, maintenance provisions, installation instructions and service instructions from HERZ etc. It is excluded for defects, which arise due to normal wear and tear, worn parts, incorrect installation by the customer or its agents, incorrect maintenance or maintenance not carried out and documented regularly, or incorrect repairs or changes performed by third parties or repairs or changes performed by third parties without written consent from HERZ and replacement of parts, which HERZ did not manufacture.

15.2. For itself and its legal successors-in-title, the purchaser expressly waives the assertion of direct or indirect damage as a result of the purchased object or defect to the purchased object, but not in the case of gross negligence caused by the purchaser (consequential damage or consequential damage caused by defects) and lost profit. If a duty to report as defined in s. 377 UGB is breached, the purchaser shall lose its right to redress. Damage, which is due to incorrect or negligent treatment as described above, is excluded from the warranty and guarantee. Warranty and guarantee claims are only acknowledged and taken into account if they are reported in writing immediately after occurrence of the defect, with a precise description of the defect. Verbal agreements are not sufficient to trigger a warranty claim. The work and services provided by HERZ shall be accepted directly after completion. Immaterial defects, which do not affect the functioning and operation of the heating system, should be recorded in the acceptance protocol and do not entitle the purchaser to refuse acceptance.
If acceptance is delayed due to no fault of HERZ, acceptance shall be deemed to have occurred 12 working days after notification of the respective work and services.
The warranty or guarantee starts from commissioning of the plant by the certified local customer service, but not later than 90 days after delivery if this is not facilitated by the purchaser.

15.3. Services provided as part of the work and services from HERZ shall not include an inspection of the entire system. A check of the seal of supply lines connected on site, and the inspection of the correct installation of electricity cables, including connections to peripheral devices, are not included in the work and services from HERZ. HERZ does not assume any liability for documents provided to HERZ. HERZ is not required to check whether information and documents provided to HERZ by the purchaser are correct and suitable for the intended use. This shall apply in particular to plant descriptions and plant diagrams.

15.4. HERZ is not required to replace or repair as long as the purchaser has not fulfilled its contractual obligations. The same warranty period shall apply to free spare parts and repairs as to the original delivered object. However, it is time-limited to the end of the warranty period of the original delivered object. Replaced parts shall become the property of HERZ and should be sent to HERZ free of charge. Extraordinary costs for repair caused by the type and location of the HERZ device or due to poor accessibility shall not be assumed either. The end customer shall ensure free and unhindered access to the device.

15.5. HERZ shall only be liable for costs of a repair performed by the purchaser itself if HERZ has granted its written consent in advance.

15.6. An additional requirement for fulfilment of the warranty claims is regular maintenance or conclusion of a maintenance agreement through HERZ or its warrantors during the warranty period.
The warranty period starts upon delivery, is 6,000 operating hours or a maximum of 2 years for moveables and 9,000 operating hours or a maximum of 3 years for immoveables or parts. HERZ is only liable for parts of goods, which are purchased from a subcontractor, within the framework of its own warranty claims against the subcontractor.

15.7. HERZ shall replace goods or parts of goods demonstrably unusable as a result of material or manufacturing faults free of charge within 3 years from commissioning of the plant and provided that the plant has not recorded more than 9,000 operating hours. This does not include moving and electronic and electrical parts, 2 years or 6,000 operating hours shall apply in this case.

Wear and tear to so-called wear parts and operating materials are not covered and therefore excluded, including, for example: relays, fuses, carbon brushes, bearings and seals, as well as crack formation not resulting in malfunction, oils, greases, filters, cleaning agents, coolants, heat transfer fluids, etc.
However, the warranty and guarantee obligation of HERZ does not cover damages caused due to air pollution as a result of dust accumulation, aggressive vapours, installation in unsuitable rooms, notably damp rooms such as laundry rooms and hobby rooms. The HERZ warranty shall also expire if a plant is continued to be operated despite a defect without the defect being repaired. See also No. 22.

15.8. If the Herz boiler or parts of the plant fails and the heating supply fails as a result, any additional costs incurred for substitute heating (backup boiler, mobile solution or similar) and its fuel costs cannot be charged to HERZ. This is exclusively the responsibility of the plant operator.

15.9. HERZ is not liable for damages outside the Product Liability Act unless malice or gross negligence is documented, and then only within the framework of the statutory provisions. Liability for slight negligence, replacement of consequential damage, pure pecuniary losses, lost profit, unrealised savings, lost interest and damages from claims by third parties against the respective contractual partner, therefore also down times and their costs for boiler plants that we delivered, and the resulting loss of heating, any additional costs for substitute heating or similar, for use of other fuels, is excluded and the purchaser expressly acknowledges this by ordering in accordance with the HERZ delivery conditions.

15.10. HERZ shall only make delivery in the country of the delivery location free of commercial property rights and third-party copyrights. In the event that a third party lodges justified claims against the ordering party because of an infringement of property rights through a delivery by HERZ that is used in accordance with the contract, HERZ shall liable to the ordering party for 3 years.
At its own choice and own costs, HERZ shall either obtain a corresponding right of use or change the delivery such that property rights are not infringed. If this is not possible for HERZ within a reasonable period, the order shall reserve the statutory rights of withdrawal or reduction. The duties of HERZ to provide compensation are based on No. 14.

15.11. In the case that HERZ suffers any damage, for which it is liable, the liability shall be restricted to 5% of the purchase price of the relevant delivered part for which it is liable. If a penalty is agreed against HERZ, in whatever case, this shall be subject to the judicial right if moderation and the assertion of damages exceeding the penalty shall be excluded.

16. Transfer
The transfer of rights and / or duties by the purchaser or ordering party from the contract is not permitted without written consent from HERZ.

17. Plant software
Control and regulation programs, which control and regulate the operation of the supplied plant, shall remain the property of HERZ. The purchaser shall only receive an unlimited right of use to its system-based control program, therefore for the implemented software, after full payment of the instrumental scope of delivery. In the event of modified or updated software, HERZ expressly reserves the right to implement this new software if required, whereby HERZ shall not charge any costs for this. The purchase has not acquired ownership of the source code, which HERZ does not disclose either. The purchaser merely acquires the usage rights. Upon conclusion of a maintenance agreement, the software shall be automatically updated provided that this new software can be implemented in the hardware.

18. Reversing the purchase agreement
If a purchase agreement is reversed (e.g. As a result of withdrawal by one of the contractual parties), the purchaser shall return the delivered object or the supplied goods to HERZ in advance, irrespective of the further settlement according to the clauses below. HERZ reserves the right to have the delivered object or the supplied goods collected from the purchaser's premises. Furthermore, HERZ can demand that the purchaser pay reasonable compensation for the deterioration, destruction or current or future impossibility of return of the delivered object for another reason, which is in the purchaser's area of risk and responsibility.
Additionally, HERZ can demand remuneration for use of the delivered object if the value of the delivered object has decreased between the end of installation and its complete, direct re-commissioning. This reduction in value is calculated from the difference between the total price according to the order and the fair value, as calculated by sales revenue or, if a sale is not possible, through estimation by a sworn expert.

19. Spare parts warranty 15 years
HERZ shall deliver spare parts for all supplied devices for 15 years from the delivery date, whereby HERZ reserves the right to supply modified but appropriate spare parts for the device.

20. Assembly
HERZ plants are assembled locally and on site. Assembly is carried out at regular hourly rates or for an agreed flat rate. The general costs for assembly / completion, commissioning of HERZ plant and training are stated in the price list (without transport to the heating room). If completion (without transport to the installation room) of the plant is agreed, access to the installation location must be possible on paved paths.

21. Commissioning the plants
The HERZ plants are supplied in accordance with electrical documentation and technical documents. The liquid (hydraulics), flue gas (flue) and electrical connections are fitted on site and must be carried out by a licensed expert / company. The HERZ plants can only be commissioned during normal working hours. Prerequisites for commissioning after prior transmission of the commissioning request:
• The heating system must be filled with heating water in accordance with the applicable standards corresponding to ÖNORM H5195 or VDI 2035. Specific deviations or requirements are listed in the respective product documentation.
• Completed electrical installation, ready-to-use, tested and corresponding to all requirements, must be performed a licensed expert.
• The fuel standards and required qualities of the wood, wood chips and pellets as stated in the current operating instructions must be used for the plant.
• The plant operator must be on site for training and instruction.
• The plant must be properly connected to the flue (sealed flue gas exhaust with regular draft conditions) and a flue installed according to the requirements (DIN 4705 or EN 13384).
If individual points are not fulfilled, the HERZ customer service must be informed promptly (at least 3 working days in advance) of the postponement to the commissioning date. Additional services such as overtime, commissioning the fuel supply, electrical work, etc., and all extra journeys if commissioning cannot be completed in one go, shall be charged to the client according to the actual cost. HERZ is unable to assume guarantees for connections to electrical or hydraulic supplies.

22. Fuels
All warranty and guarantee claims are only fulfilled if the fuels listed and approved in the HERZ operating instructions are used. For special fuels, corresponding approvals must be obtained from the manufacturer before ordering.

23. Place of performance
23.1. If the ordering party is a merchant, place of performance for both parties is the registered place of domicile of HERZ. Austrian law is agreed for all disputes from this contract. The competent court in Eisenstadt or Graz, to be selected by HERZ, is agreed for all disputes from this contract. German shall exclusively apply as the contractual language. All conditions shall also apply to the employees, suppliers and vicarious agents of HERZ.

23.2. The UN Convention on the International Sale of goods, CISG, is expressly excluded.

24. In principle, these general delivery terms and conditions shall only apply to legal transactions between companies.

25. If individual provisions of the contract are invalid, the rest of the contract shall remain binding. This shall not apply if adherence to the contract were to represent an unreasonable hardship for one party. If a part of these sales and delivery conditions are or become void, it is expressly agreed that this shall not affect the validity of the remaining conditions. An invalid condition shall be replaced as determined from the sense and purpose of the other conditions.

BUSINESS PARTNERS IN:

AUSTRALIA
BELGIUM
BULGARIA
DENMARK
GERMANY
ESTONIA
FINLAND
FRANCE
GREECE
GREAT BRITAIN
IRELAND
ITALY
JAPAN
CANADA
CROATIA
LATVIA
LITHUANIA
LUXEMBOURG
NEW ZEALAND
NETHERLANDS
NORWAY
AUSTRIA
POLAND
PORTUGAL
ROMANIA
RUSSIA
SWEDEN
SWITZERLAND
SERBIA
SLOVAKIA
SLOVENIA
SPAIN
SOUTH AFRICA
CZECH REPUBLIC
UKRAINE
HUNGARY

Stamp of the representation

HEADQUARTER:
HERZ Energietechnik GmbH
Herzstraße 1, 7423 Pinkafeld
Austria
Tel.: +43 (0)3357 / 42840-0
Fax: +43 (0)3357 / 42840-190
Mail: office-energie@herz.eu
Web: www.herz-energie.at

Version ENG 04-2021 V1.2 - PART 1